GREC

Agitatori Miscelatori Dispersori

MIXERS USE AND MAINTENANCE MANUAL

GREC S.r.l., Via Copernico, 3
20082 Binasco (Mi) – ITALY
Tel. +39 02 3664 5050
Fax +39 02 3664 5054
info@grec.it; www.grec.it

Tax ID. / VAT n. / Reg. Register of Companies of Milan
06972530965
R.E.A. of Milan n. 1926397
Reg. Cap.: 90.000,00€ f.p.

INSTRUCTION MANUAL

INDUSTRIAL MIXERS

Customer:

Order:

Job order:

Mixer/s:

Model			
Q.ty			
Serial number			
Gearbox			
Motor			
Seal			

List of attachments, which are an integral part of this manual.

	CE declaration of conformity		Certificate of Origin
	Mixer Technical Sheets		Material Certificates
	Electric Motor Manual		Test Report
	Gearbox Manual		Testing Procedures
	Mechanical Seal Manual		

Manufacturer:

GREC S.r.l.
Via Copernico, 3 - 20082 Binasco (Mi) - ITALY
Tel.: +39 02 36645050 - Fax: +39 02 36645054 - E-mail: info@grec.it

TABLE OF CONTENTS

1	Range of mixers	4
2	Size and technical data	8
3	Warnings and Warranty	18
4	General Safety Recommendations	22
5	Instructions for storage	22
6	Installation	23
7	Start up	49
8	Control and preventive maintenance plan	51
9	Corrective maintenance	54
10	Troubleshooting table	63
11	CE certificate	65

SAFETY INSTRUCTIONS

These symbols indicate the type of risk resulting from failure to observe the safety requirements:

DANGER
RISK OF ELECTRIC SHOCK

Warning that failure to comply with the requirements may cause electric shocks or electrocution

DANGER
GENERIC

Warning that failure to comply with the requirements may cause harm to people and objects.

WARNING

Warning that failure to comply with the requirements may cause damage to the mixer or other equipment.

1 - THE RANGE OF MIXERS

SIDE MIXERS: to be used only in storage tanks or simple mixing operations. They are not suitable for high viscosities.
They are distinguished by their installed power, but the parameter used to select them is the generated flow rate.

FAST AL MODEL **Driving set:** Aluminium spider with bearing **N. sizes:** 9 **Rotation speed:** 700-900 RPM **Flow rate:** 60-1358 m3/h **Power:** 0.25-11 kw **Seal options:** only single mechanical seal, immersed in the product	
SLOW ALF MODEL (small sizes) **Driving set:** Worm screw gearbox **N. sizes:** 6 **Rotation speed:** 140÷280 RPM **Flow rate:** 86-1500 m3/h **Power:** 0.12-2.2 kw **Seal options:** single mechanical seal, immersed in the product. Cartridge seal is available for larger sizes.	
SLOW ALC MODEL (large sizes) **Driving set:** Bevel gearbox **N. sizes:** 6 **Rotation speed:** 190÷340 RPM **Flow rate:** 1600-9000 m3/h **Power:** 2.2-55 kw **Seal options:** cartridge mechanical seal in any configuration, shut off, spacer joint. Seal immersed in the product is available for smaller sizes.	

AL	_	1	-	0.37	/ 6	-	Y	W

- W: Seal system (see table 3)
- Y: Wet parts materials (see table 2)
- 6: Motor pole number (omitted for the 4-pole motor)
- 0.37: Motor power
- 1: Mixer size: progressive n. based on the series
- _: Mixer series: _ = direct, F = with worm screw reduction gear, C = with orthogonal reduction gear. X is added for ATEX mixer
- AL: Mixer type (AL = side mixer)

VERTICAL MIXERS: Their application is very flexible
They differ according to the driving set. The size depends on the torque (power divided by number of revs)
The seal options are shared by the entire range.
The fast series is used for smaller tanks or to carry out dispersions

FAST AV MODEL **Driving set:** Aluminium spider with bearing **Motor position:** Vertical **Rotation speed:** 750÷1500 RPM **Flow rate:** 60-1400 m3/h **Power:** 0.12-18.5 kw **Shaft diameters:** 15-65mm	
SLOW AVF MODEL (small sizes) **Driving set:** Worm screw gearbox **Motor position:** Horizontal **Rotation speed:** 50÷280 RPM **Flow rate:** 50-2700 m3/h **Power:** 0,12-4 kw **Shaft diameters:** 25-50mm	
SLOW AVC MODEL (large sizes) **Driving set:** Orthogonal bevel gearbox **Motor position:** Horizontal **Rotation speed:** 15÷250 RPM **Flow rate:** 1500-30000 m3/h **Power:** 1.1-45 kw **Shaft diameters:** 40-100mm	
SLOW AVL MODEL (large sizes) **Driving set:** Parallel axis gearbox **Motor position:** Horizontal **Rotation speed:** 15÷250 RPM **Flow rate:** 1500-30000 m3/h **Power:** 1.1-45 kw **Shaft diameters:** 35-100mm	
SLOW AVS MODEL (large sizes) **Driving set:** Coaxial gearbox **Motor position:** Vertical **Rotation speed:** 15÷360 RPM **Flow rate:** 100-50000 m3/h **Power:** 0.25-22 kw **Shaft diameters:** 25-120mm AVS1÷4: Coaxial with cylindrical gears AVS5÷11: Coaxial with epicycloidal gears AVSm5÷9: Coaxial with cylindrical gears with additional bearing for longer shafts AVSh5÷9: Coaxial with epicycloidal gears with additional bearing for longer shafts	

AV	F	2	-	0.37	/ 80	v	-	AC	-	Y	L	X

X: with base guide; _: without guide

Seal system (see table 3)

Material of parts in contact (see table 2)

Number and type of impellers (see table 1)
2A = with two impellers Pag T1, AC = Pag T1 base, Sabre KVA C top

v: variable speed; d: dual polarity; _: fixed speed

Rotation speed

Motor power

Mixer size: progressive n. based on the series

Mixer series: _ = direct, F = with worm screw reduction gear, S = with coaxial reduction gear, L = with parallel axis reduction gear, C = with orthogonal reduction gear. X is added for ATEX mixer

Mixer type (AV = vertical mixer)

Table 1: Impellers					
Axial impellers	**Sabre KVA T (T)** High efficiency three-blade axial impeller with thin blades	**Pag T1 (A)** High efficiency three-blade axial impeller with wing profile	**Marine (M)** High head, ideal solution for direct mixers with impellers that are smaller than the diameter of the tank	**Sabre KVA C (C)** Impeller with high flow and head, for side mixers or viscous products	**Axial turbine (P)** Used to give a cutting action to the products (preparation of solutions) and for average viscosities
Radial impellers	**Radial turbine (R)** A flexible solution to create the cutting action required at both slow and fast speeds - ideal as a base impeller with very low head	**Rusthon turbine (H)** Very powerful impeller, generates shear and flow rate. Ideal for gas dispersion in liquid	**Cowles (S)** It provides cutting action only to disperse insoluble products - often coupled with a marine that recirculates the product		

Table 2: Materials	
A	Carbon steel
_	SS304
Y	SS316L
D	SS904L
E	SAF 2205
F	SAF 2501
G	Hastelloy
H	Rubber-coated
I	Ebonite-coated
J	Abcite-coated
K	PP-coated
L	Halar-coated
M	PFA-coated
N	SS304 polished
O	SS316L polished

Table 3: Seal system					
Without stool		Single, with stool		Double, with stool	
L	Lip	**L**	Lip		
B	Packing	**C**	Packing		
	graphite/NBR (side) Without Seal (vertical)				
W	hard surfaces/NBR				
V	graphite/Viton	**S**	graphite/Viton	**D**	graphite/Viton
WV	hard surfaces/Viton	**SW**	hard surfaces/Viton	**DW**	hard surfaces/Viton
E	graphite/EPDM	**SE**	graphite/EPDM	**DE**	graphite/EPDM
WE	hard surfaces/EPDM	**SWE**	hard surfaces/EPDM	**DWE**	hard surfaces/EPDM
T	graphite/PTFE	**ST**	graphite/PTFE	**DT**	graphite/PTFE
WT	hard surfaces/ PTFE	**SWT**	hard surfaces/ PTFE	**DWT**	hard surfaces/ PTFE

Mechanical seal within the process, without stool

Short stool for cartridge seal

Tall stool for double seal

Further possibilities:

F: removal of seal without removing the reduction gear

H: Shut off system to maintain pressure in the system while replacing the seal

2 - SIZE AND TECHNICAL DATA

Connection flanges

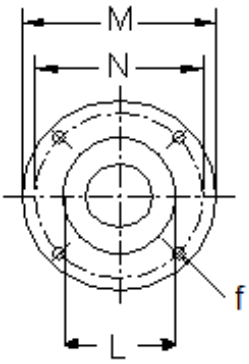

The flanges of the AVL and AVF hear reducers have a protruding L centring

Flanges	M	N	L	f
OD110	110	80	-	4 x 9
OD125	125	90	-	4 x 11
OD210	210	176	-	8 x 12.5
OD280	280	230		8 x 13
IEC71	160	130	110f8	4 x 11
IEC80/90	200	165	130f8	4 x 11
IEC100/112	250	215	180f8	4 x 14
IEC132	300	265	230f8	4 x 14
IEC160/180	350	300	250f7	4 x 18
IEC200	400	350	300f7	4 x 18
IEC225	450	400	350f7	4 x 18
IEC250	550	500	450f7	8 x 18
DN50PN10	165	125	-	4 x 18
DN65PN10	185	145	-	4 x 18
DN80PN10	200	160	-	4 x 18
DN100PN10	220	180	-	8 x 18
DN150PN10	285	240	-	8 x 22
DN200PN10	340	295	-	8 x 22
DN250PN10	395	350	-	12 x 22
DN300PN10	445	400	-	12 x 22
DN350PN10	505	460	-	16 x 22
DN400PN10	565	515	-	16 x 26

AVF reduction

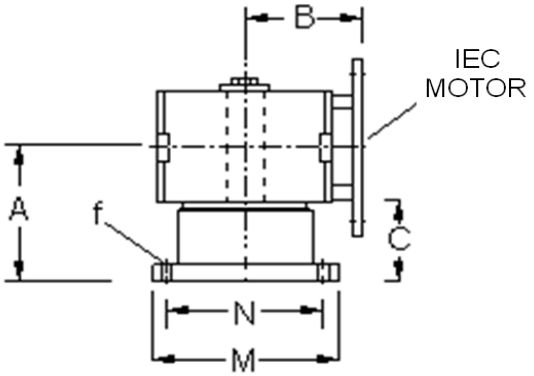

Model		Size						Connection	
Model	Reduction gear size	Reduction shaft (mm)	Weight (Kg)	A (mm)	B (mm)	C (mm)	IEC motor	Reduction gear flange	Flange DN
AVF1	40	18H7	2	100	75	61	71B5	OD110	DN50
AVF2	50	25 H7	4	115	82	76	71B5	OD125	DN50/DN80
AVF3	50	25H7	4	115/219*	82	76	80B14	OD125	DN80/DN150*
AVF4	75	30H7	10	176/228*	114	120/200*	90B14	OD210	DN100/DN150*
AVF5	90	35H7	17	156/260*	122	86/190*	90B14	OD210	DN100/DN150*
AVF6	110	42H7	32	150/225*	153	76/150*	90B14 100B14	IEC100	DN150

*With mechanical seal stool

AVC reduction

AVL reduction

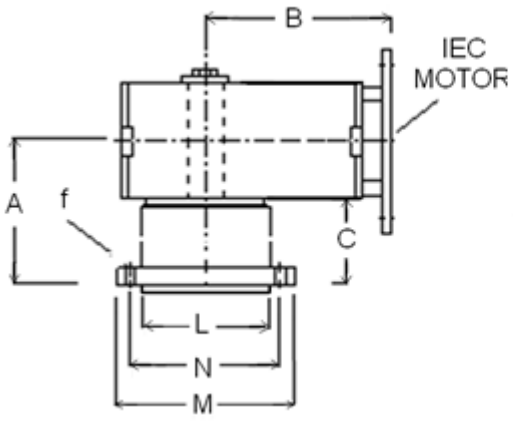

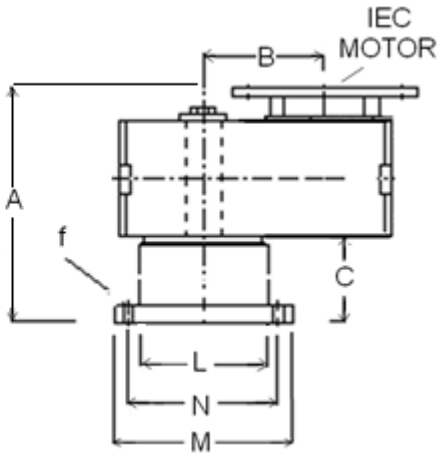

Model		Size						Connection	
Model	**Reduction gear**	**Slow shaft (mm)**	**Weight (Kg)**	**A (mm)**	**B (mm)**	**C (mm)**	**IEC motor**	**Reduction gear flange**	**Flange DN**
AVL1	ZF80	35h6 x 129	21	272	146	36	90B5	IEC80f	DN150
AVL2	ZF100	45h6 x 154	39	307 317	184	50	90B5 112B5	IEC100f	DN150
AVL3	ZF125	55h6 x 179	72	365 386	229	64	112B5 132B5	IEC132f	DN250
AVL4	PMF125	60h6 x 160	105	314 314	222	30	112B5 132B5	IEC160	DN300
AVL5	ZF160B	70h6 x 219	131	456 486	290	72	132B5 180B5	IEC160f	DN300
AVL6	FZ128	80h6 x 263	239	440 490	301	42	132B5 180B5	IEC225	DN400
AVL7	ZF180B	90h6 x 259	185	542	312	87	180B5	IEC200f	DN400
AVL8	ZF200B	100h6 x 298	280	347	367	0	180B5 200B5		DN400
AVC1	OMF80	35h6 x 119	20	100	244	35	90B5	IEC80	DN150
AVC2	OMF90	45h6 x 138	44	113	264 274	23	90B5 112B5	IEC100	DN150
AVC3	OMF112	55h6 x 158	68	142	370	37	112B5	IEC132	DN250
AVC4	OMF125	60h6 x 142	56	150	366	60	112B5 132B5	IEC132	DN250
AVC5	OMF140	70h6 x 198	110	180	411 469	70	132B5 160B5	IEC160	DN300
AVC6	OMF150	80h6 x 240	120	175	453 512	38	132B5 180B5	IEC200	DN400
AVC7	OMF170	90h6 x 261	180	184	563 568	34	180B5 200B5	IEC200	DN400
AVC8	OMF190	100h6 x 299	250	211	592 633	51	200B5 225B5	IEC250	DN400

AVS reduction

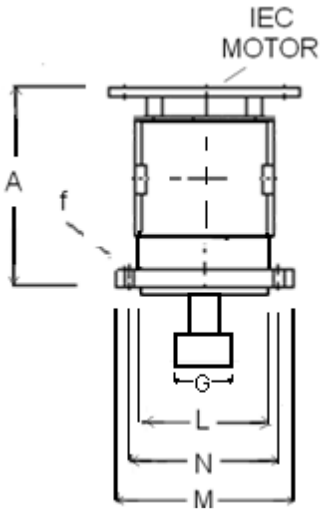

AVSh /AVSm reduction

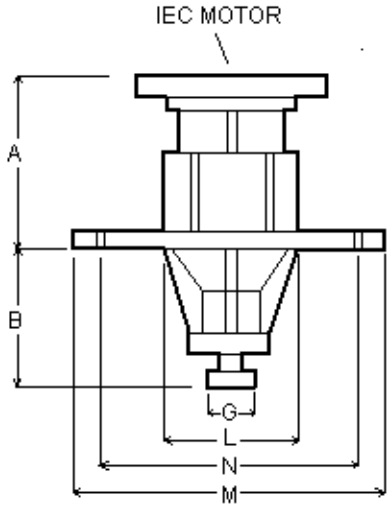

Model		Size					Connection	
Model	**Reduction gear**	**Reduc. gear shaft (mm)**	**Weight (Kg)**	**A (mm)**	**G (mm)**	**IEC motor**	**Reduc. gear flange**	**Flange DN**
AVS1	H61	28	10	215	Rig 50	90B5	IEC100	DN150
			14	230		112B5		
AVS2	RCV352	35	26	224	Rig 70	90B5	IEC100	DN150
						112B5		
AVS3	RCV452	45	41	250	Rig 75	90B5	IEC132	DN250
						112B5		
AVS4	RCV552	55	63	283	Rig 90	112B5	IEC132	DN250
				298		132B5		
AVS5	EX502	60	56	322	Flg 168	112B5	IEC160	DN250
			58	343		132B5		
AVS6	EX802	70	92	412	Flg 210	132B5	IEC200	DN300
AVS7	EX802	80	92	412	Flg 210	132B5	IEC200	DN300
			100	462		160B5		
AVS8	EX1002	90	112	478	Flg 280	160B5	IEC225	DN350
			119	528		180B5		
AVS9	EX1502	100	144	538	Flg 280	160B5	IEC225	DN350
						180B5		
AVS10	EX2502	110	200	550	Flg 330	160B5	IEC225	DN350
						180B5		
AVS11	EX3003	120	220	590	Flg 385	160B5	IEC250	DN400
						180B5		

Model		Size						Connection
Model	**Reduc. gear**	**Reduc. gear shaft (mm)**	**Weight (Kg)**	**A (mm)**	**B (mm)**	**G (mm)**	**IEC motor**	**Reduction gear flange**
AVSm5	ZR88	60	174	453	360	Flg 180	112B5	IEC160
							132B5	
AVSm6	ZR108	70	260	462	420	Flg 200	132B5	IEC225
				506			160B5	
AVSm7	ZR128	70	332	556	500	Flg 200	160B5	IEC250
AVSm8	ZR148	100	440	586	600	Flg 280	160B5	IEC250
							180B5	
AVSh5	303VK	80	115	218	200	Flg 200	112B5	Drawn plate L=195
							132B5	
AVSh6	305VK	80	127	248	200	Flg 200	132B5	Drawn plate L=195
AVSh7	306VK	100	135	254	230	Flg 280	132B5	Drawn plate L=250
							160B5	
AVSh8	307VK	120	185	313	305	Flg 330	160B5	Drawn plate L=280
AVSh9	309VK	120	195	335	308	Flg 330	160B5	Drawn plate L=280

Motors

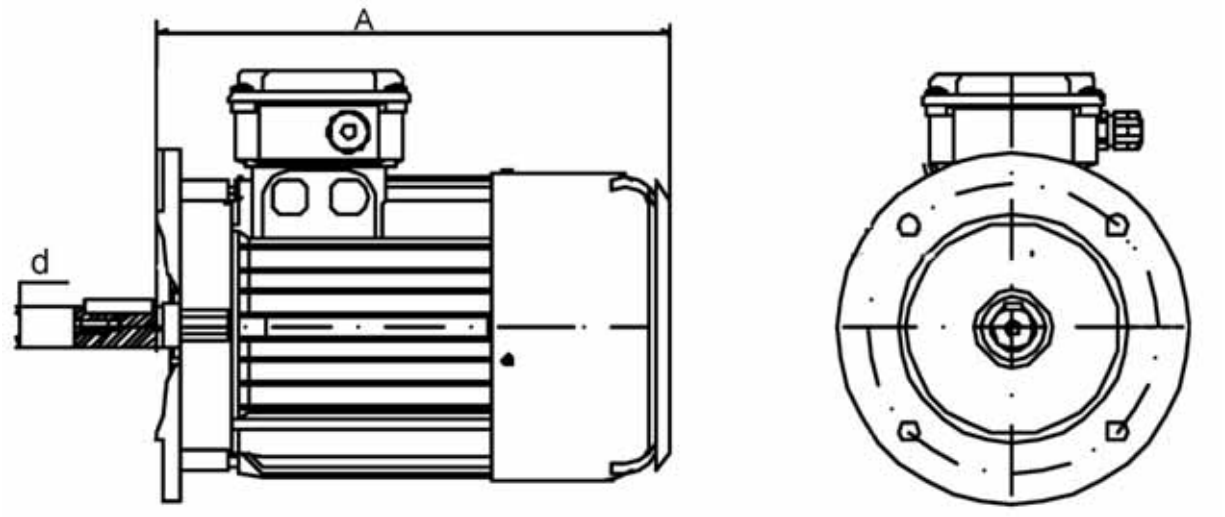

	4p		6p		8p		Size		
IEC	Kw	RPM	Kw	RPM	Kw	RPM	Kg	d(mm)	A(mm)
71	0.25	1380	0.18	890	0.09	680	5	14	215
71	0.37	1370	0.25	890	0.12	680	6	14	215
80	0.55	1400	0.37	900	0.18	680	8	19	240
80	0.75	1400	0.55	900	0.25	680	9	19	240
90S	1.1	1425	0.75	925	0.37	700	14	24	255
90L	1.5	1425	1.1	910	0.55	700	17	24	280
100	2.2	1440	1.5	950	0.75	710	25	28	320
100	3	1445			1.1	710	35	28	320
112	4	1450	2.2	955	1.5	710	35	28	320
132M	5.5	1460	3	950	2.2	710	62	38	380
132L	7.5	1460	4	950	3	710	73	38	420
132L	9.2	1460	5.5	950			73	38	420
160M	11	1470	7.5	960	4	710	105	42	500
160M					5.5	710	105	42	500
160L	15	1470					125	42	540
160L			11	960	7.5	710	125	42	540
180	18.5	1470			11	730	165	48	595
180L	22	1470	15	975			175	48	595
200L	30	1475	18.5	990			290	55	740
200L			22	990			290	55	740
225S	37	1485					370	60	820
225M	45	1485	30	990			400	60	820
250M	55	1480	37	990			480	65	900

The A, Kg, and RPM values of the motors are indicative as they depend on the brand

Side entry mixers

DIRECT MIXERS										
Model	**kW**	**RPM**	**D (mm)**	**d x H**	**A**	**B**	**Kg**	**Flange**	**b**	**h**
AL0-0,12/8-W	0,12	700	130(A)	20 x 400	215	48	9	DN50	40	45
AL0-0,25/8-W**	0,25	680	160(M)	25 x 450	240	70	15	DN80	50	45
AL0-0,37/6-W**	0,37	910	160(M)	25 x 450	240	70	15	DN80	50	45
AL0-0,75/8-W	0,75	710	220(M)	30 x 500	320	106	35	DN100	55	45
AL0-1,5/8-W	1,5	720	280(A)	35 x 550	325	106	40	DN100	65	45
AL1-0,37/6-W	0,37	910	160(M)	25 x 450	240	170	28	DN80	50	45
AL1-0,55/8-W	0,55	690	220(M)	25 x 500	280	170	34	DN80	50	45
AL1-1,1/6-W	1,1	920	220(M)	30 x 500	280	170	35	DN80	55	45
AL2-1,5/8-W	1,5	720	280(A)	30 x 500	330	320	52	DN100	55	45
AL3-3/8	3	720	300(A)	35x 600	425	370	102	DN150	65	65
AL3-5,5/6	5,5	950	300(A)	40 x 600	425	370	110	DN150	70	65
AL4-7,5/6	7,5	960	320(A)	40 x 650	500	370	158	DN200	70	75
AL4-11/6	11	960	340(A)	45 x 650	540	370	200	DN200	80	75
AL1-0,36d-W	0,36 / 0,15	940 / 740	160(M)	25 x 450	240	170	30	DN80	50	45
AL1-0,66d-W	0,66 / 0,33	920 / 700	200(PM)	30 x 500	280	170	35	DN80	55	45
AL2-1,25d-W	1,25 / 0,6	945 / 715	220(M)	30 x 500	320	320	45	DN100	55	45
AL2-1,8d-W	1,8 / 1,0	955 / 720	200(C)	30 x 500	320	320	54	DN100	55	45
AL3-2,2d-W	2,2 / 0,9	960 / 725	260(PM)	35 x 600	380	370	86	DN150	65	65
AL3-4d-W	4,0 / 1,7	935 / 705	280(A)	35 x 600	420	370	110	DN150	65	65
AL4-5,5d-W	5,5 / 2,2	975 / 730	300(A)	40 x 650	500	370	160	DN200	70	75
AL4-7,5d-W	7,5 / 3,0	975 / 735	320(A)	40 x 650	540	370	185	DN200	70	75

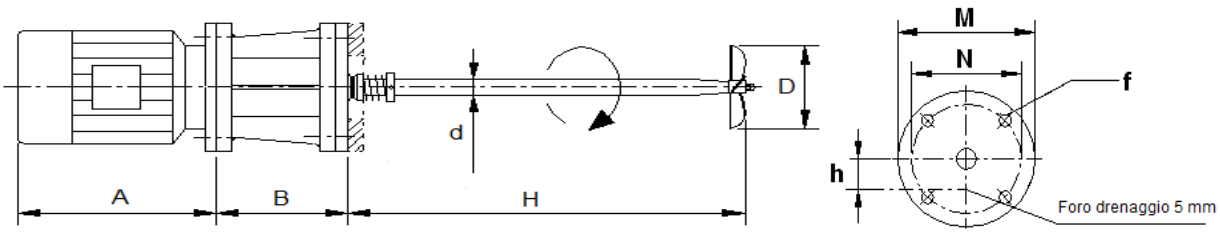

LOW SPEED MIXERS										
Model	**kW**	**RPM**	**D (mm)**	**d x H**	**A**	**B**	**Kg**	**Flange**	**b**	**h**
ALF2-0,18W**	0,18	180	300(A)	25 x 580	215	295	10	DN80	50	45
ALF2-0,25-W**	0,25	180	300(C)	25 x 580	215	295	17	DN80	50	45
ALF3-0,55-W**	0,55	280	300(C)	25 x 580	220	320	19	DN80	50	45
ALF3-0,75-W	0,75	190	400(C)	30 x 600	220	355	25	DN80	55	45
ALF4-1,1-C-W**	1,1	190	400(C)	30 x 650	290	365	40	DN10 0	55	45
ALF4-1,1-W**	1,1	190	500(F)	30 x 650	290	365	50	DN100	55	45
ALF4-1,5-W	1,5	190	550(F)	35 x 650	290	380	50	DN100	65	45
ALF5-1,5-W	1,5	122	600(C)	35 x 700	290	380	70	DN100	65	45
ALF5-2,2-W**	2,2	190	590(F)	35 x 700	300	450	70	DN100	65	45
ALF6-4-W	4	190	660(F)	45 x 750	350	465	110	DN150	75	55
ALF2-0,12-E	0,12	270	220(M)	25 x 580	190	255	11	DN50	50	35
ALF2-0,18-E	0,18	180	300(C)	25 x 580	215	295	16	DN80	50	45
ALF2-0,25-E	0,25	140	400(C)	30 x 650	215	295	18	DN80	50	45
ALF3-0,37-E	0,37	121	450(C)	30 x 650	215	295	19	DN80	50	45
ALF4-0,75-E	0,75	90	600(C)	35 x 700	275	345	30	DN100	55	45
ALFx2-0,25	0,25	200	300(C)	25 x 580	205	325	21	DN80	50	45
ALFx3-0,75	0,75	200	400(C)	30 x 600	220	355	25	DN80	55	45
ALFx4-1,5	1,5	200	550(F)	35 x 650	290	380	50	DN100	65	45
ALFx5-2,2	2,2	200	590(F)	35 x 700	300	450	70	DN100	65	45

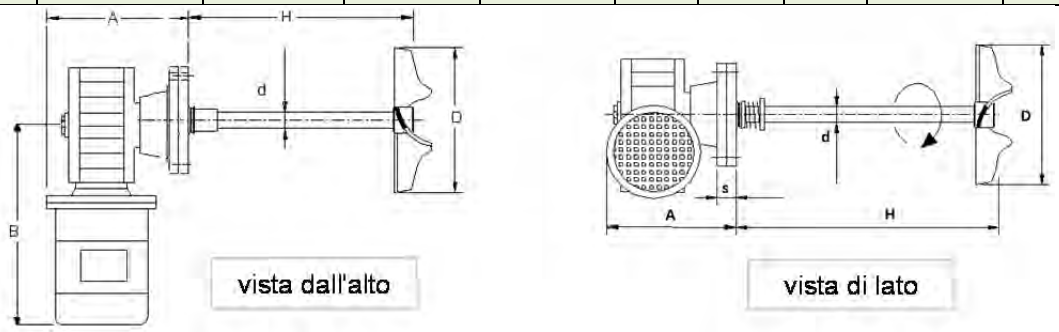

LOW SPEED MIXERS WITH CARTRIDGESEAL								
Model	**kW**	**RPM**	**D (mm)**	**d x H**	**A**	**B**	**Kg**	**Flange**
ALF3-0,55-S	0,55	280	300(C)	25 x 600	320	320	30	DN100
ALF3-0,75-S	0,75	190	400(C)	30 x 600	320	360	35	DN100
ALF4-1,5-S	1,5	190	550(F)	35 x 650	340	380	45	DN100
ALF5-2,2-S	2,2	190	590(F)	40 x 700	390	450	85	DN150
ALF6-4-S	3	190	660(F)	45 x 750	400	460	105	DN150
ALC1-5,5-S	5,5	280	620(F)	50 x 750	460	600	160	DN150
ALC2-7,5-S	7,5	280	660(F)	55 x 800	550	660	225	DN250
ALC2-11-S	11	280	710(F)	55 x 800	550	780	265	DN250
ALC3-15-S	15	195	790(C)	70 x 950	600	850	320	DN300

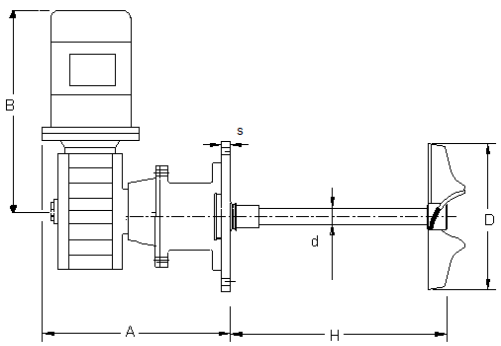

INSTRUCTIONS FOR THE INSTALLATION OF HORIZONTAL MIXERS

INSTALLATION INSTRUCTION

POSITION ON VESSEL

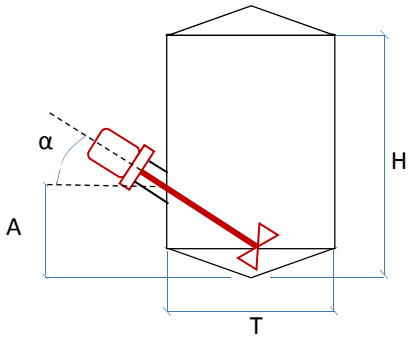

WHEN LIQUID LEVEL IS GREATER THAN DIAMETER

Direction: radial

Elevation: A = min H/8

Slope: downward with α fromtable, function of vessel diameter

α	16	20	25	30	35	40
T/A	7,0÷5,6	5,5÷4,4	4,3÷3,4	3,3÷2,8	2,7÷2,4	2,3÷1,9

Multiple mixers: Not foreseen

MECHANICAL SEAL VENTING

When connection to vessel is by nozzle and not directly on wall, during vessel filling it is recommended to vent mechanical seal with suitable plug obtained in the top part of connecting flange, or directly on the seal, when it is cartridge type.

If mixer is down sloped, this is mandatory to avoid seal dry running and quick failure.

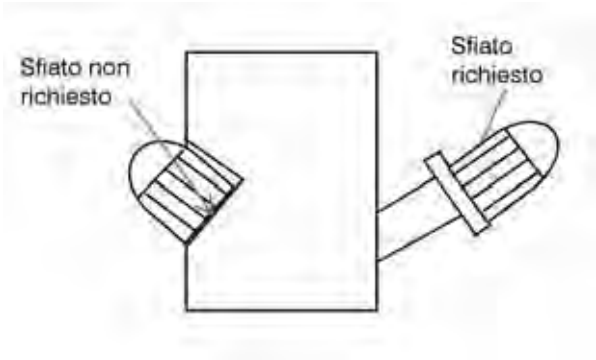

DISTANCE FROM WALLS

For best performances, impeller shall not be too close to walls:

H: Distance from vertical wall (has influence on shaft lenght): Min = 0,6 D

C: Distance of impeller lower part from bottom: Min = 150mm, never below welding line for dished bottom

L: Liquid level above impeller upper part min = 1,5 x D

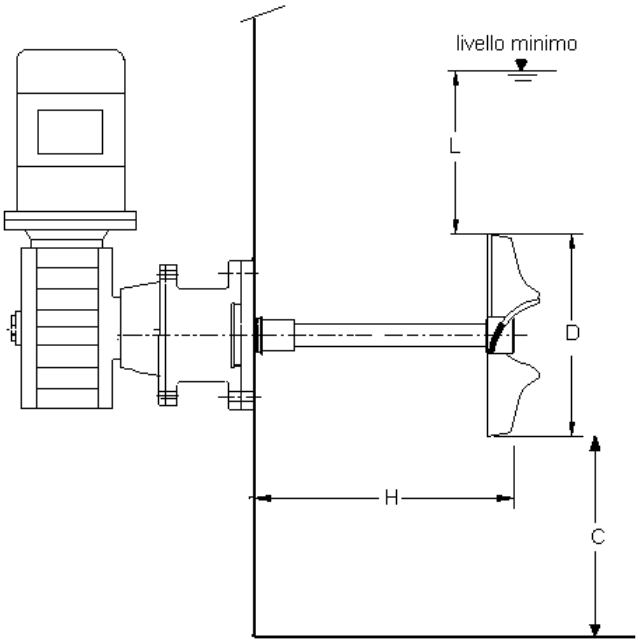

HORIZONTAL VESSELS

Mounting: fixed on one bottom, as close as possible to vessel axis, in the lower part, ù

Orientation: Downward, with α as per table, function of H/A

α	11	12,5	14	16	18,5	22
H/A	10	9	8	7	6	5

Multiple agitators: Not recommended

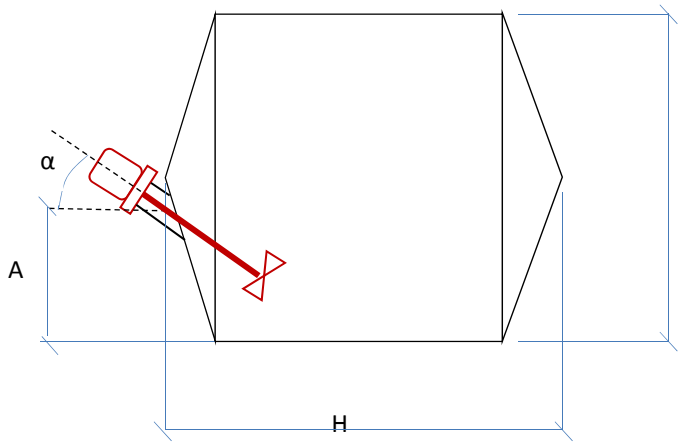

VERTICAL VESSEL WITH DIAMETER BIGGER THAN HEIGHT

Direction: left sloped α

α = 7° for vessel diameter less than 15m

α = 10° for vessel diameter greater than 15m

α = 20° for solid suspension applications

Elevation: For dished bottom, minimum 0,5 D from weld line,

for flat bottom, minimum 0,5 D + 150mm

Slope: Horizontal

Multiple mixers: To be positioned in the same region, with same inclination.

Distance between them about 25°

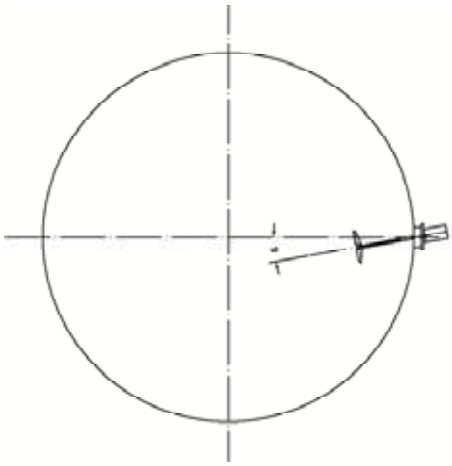

Single mixer
inclination = α

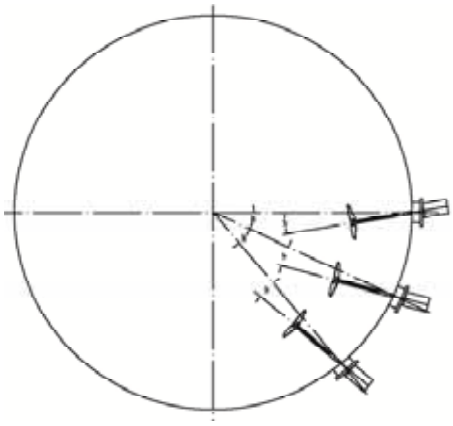

Multiple mixers
25°distance on wall, same quarter
inclination = α

INSTRUCTIONS FOR THE INSTALLATION OF VERTICAL MIXERS

POSITIONING ON THE TANK

CENTRAL INSTALLATION IN TANKS WITH CIRCULAR BASE
(needed for suspension of solids and thermal exchange)
The internal wall of the tank must be added the same number of vertical breakwaters as the impeller's blades.
The aim is to break the whirl generated by the rotation and to create a totally axial motion, as per drawing
Distance from the wall: A=T/36
Breakwater width: B = viscosity function as per table (T/12 for low viscosity applications)

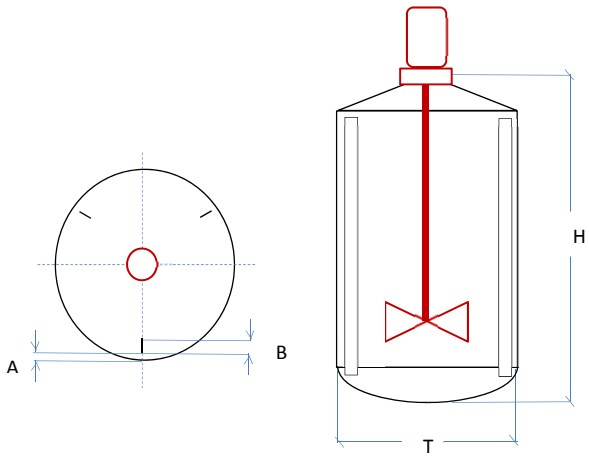

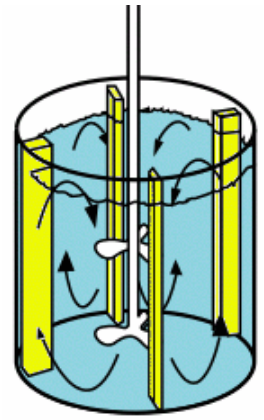

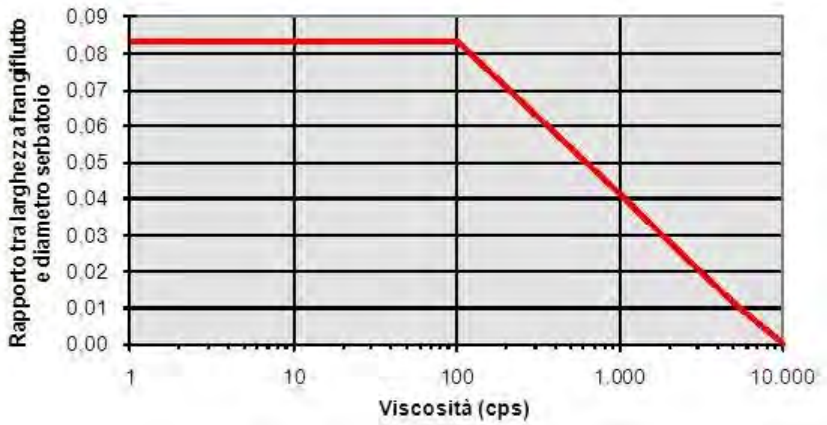

INSTALLATION WITHOUT BREAKWATERS
Breakwaters are an additional cost and they are not allowed for sanitary applications.
There are three ways to avoid to use them:

1) For smaller tanks or tanks where the D/T ratio, between the impeller's and the tank's diameters is low (< 0.3), it is possible to install an offset mixer, that is vertical with distance from the axis of 0.16÷0.25 times the tank's diameter (Fig. a)
2) When the D/T ratio is too high and the impeller would be too close to the wall, so the mixer can be inclined of max 10° towards the centre, as per Fig. b, in this case we have A=0.28 T and B=0.165 T
3) If the tank has a rectangular base, the corners function as breakwaters. It the rectangle is very long, it is possible to install two mixers, each of them placed at the centre of a semi-rectangle

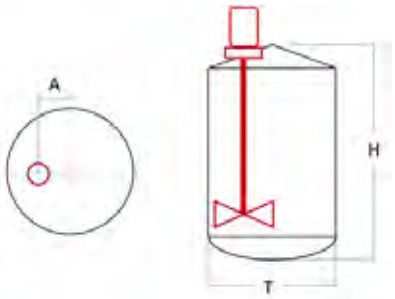

Fig. a

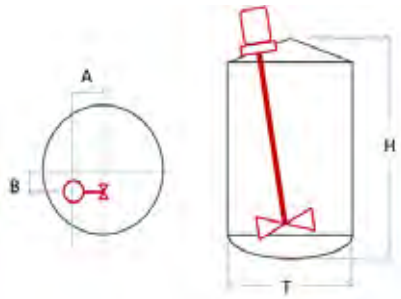

Fig. b

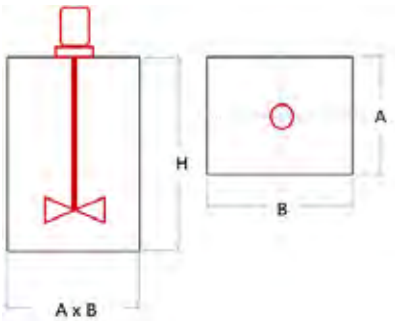

Fig. c

DISTANCES FROM THE EDGES

In order for the mixer to work to its best, the impeller with diameter D must not be too close to the walls and to the surface of the liquid at minimum level

S: Distance of the end of the impeller from the wall (it determines the length of the shaft): Min 150mm

C: Distance of the impeller from the bottom or from another impeller: Min 0.25 D (usually between 0.5 and 1.5 D)

L: Minimum level of the liquid above the impeller: 0.5 D (usually D)

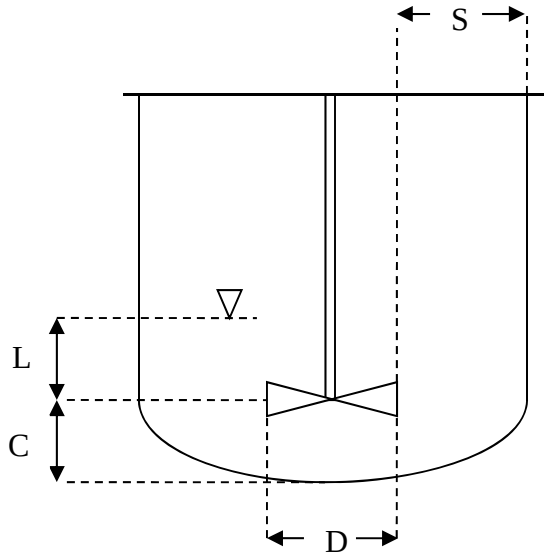

INSERTION OF THE IMPELLERS

The bolted impellers must be fitted on the shaft, at the last moment, inside the tank, so an opening of at least 500 mm is necessary for the operators to go in.
For welded impellers (the smaller ones, coated with acid-proof material or for the food industry), the possibility to fit them in the tank already mounted on the shaft should be verified.
In case of impellers which are already welded to the shaft, the minimum diameter required usually is little smaller than the impeller diameter; whereas, for dowelled impellers the minimum passageway required is about 2/3 of the diameter, according to the nozzle length.

If a sufficient opening is not available in the tank, there are only two possibilities:
a) On-site welding of the minimum number of blades (in order to fit the impeller, it is usually sufficient not to weld the last blade)

b) Close the tank after having fitted the shaft with the welded impellers.

In case of difficult assembly condition, a 2D or 3D simulation can help.

Max passage diameter in case of impeller taken off from the shaft (indicative measures in mm)				
Nozzle	Internal diameter	Three-blade impeller with thin blades	Three-blade impeller with large blades	Four-blade impeller
DN150	170	260	160	160
DN200	220	340	220	250
DN250	270	430	250	300
DN300	320	520	350	400
DN400	410	660	450	500
DN500	510	800	500	650
DN600	610	950	600	800

3 - WARNINGS AND WARRANTY

3.1 - Introduction

The purpose of this manual is to provide the necessary information for the safe installation, use and maintenance of the mixer.
The mixer is designed and built for industrial use and therefore must only be installed and used by qualified personnel who are familiar with applicable directives and standards of practice generally recognised.
The user should read this entire manual before using the mixer.
Improper use may damage the mixer and invalidate the warranty.

The mixer is NOT a "ready-to-use machine", but is a component of a POTENTIALLY HAZARDOUS system, as it is equipped with unprotected rotating parts which, in case of contact, can cause serious harm to people and objects. All uncovered rotating parts of the mixer must be segregated or protected so that it is impossible to make contact with people or objects when the motor is powered. The responsibility for the safety of the finished machine and compliance with all applicable laws and directives belongs to the manufacturer or assembler incorporating the mixer as a component.
It is strictly forbidden to put the mixer into service before the machine into which it will be incorporated is declared compliant with applicable safety regulations.

When requesting technical support or spare parts from our offices, always communicate the model and serial number indicated on the mixer data plate.
The following instructions and warnings refer to our standard mixer models with three-phase electric motor. For any special variant or version, pay particular reference to the annexes and the documents of sale.
For questions or situations not described in this manual or other documents of sale, please contact our office.

3.2 - Warranty

With effect from the date of delivery, GREC S.r.l. guarantees the mechanical parts of the machine, in normal conditions of use and service, for a period of 12 MONTHS.

THIS WARRANTY DOES NOT COVER PARTS SUBJECT TO WEAR

The warranty is understood as replacement of the faulty part ex GREC Srl works.
The costs of transporting and installing the new piece are charged to the customer.
Any commercial terms agreed in the order have precedence over this declaration.

3.3 - Liability

The manufacturer declines all responsibility in the following cases:
- mixer use which does not comply with national safety and accident prevention laws
- incorrect installation, failure to follow the instructions in this manual correctly
- power supply faults
- modifications or tampering
- operations carried out by untrained or unsuitable personnel.

The safety of the machine also depends on careful observation of the requirements listed in the manual, and in particular it is necessary to:
- always operate within the envisaged limits of use
- always ensure diligent regular maintenance
- assign operators who are trained for the purpose to inspection and maintenance
- use original spare parts only

The instructions in this manual do not replace but supplement the requirements of the applicable legislation regarding safety standards.

The mixer is designed to operate with fluids with the characteristics (density, viscosity, temperature etc.) specified in the contract documents (e.g. order confirmation). In the absence of such specifications, it is the responsibility of the installer to check the compatibility of the mixer and its components (e.g. mechanical seals, gaskets etc.) with the fluids and operational characteristics to which it is subjected.

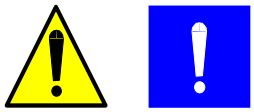

Working with fluids other than those specified in the contract documents or in operating conditions other than those listed in the contract documents or in the next paragraph can cause harm to the mixer and/or people and/or surrounding property.

4 - GENERAL SAFETY RECOMMENDATIONS

READ THIS SECTION CAREFULLY BEFORE STARING TO USE THE MIXER. FAILURE TO OBSERVE THESE RECOMMENDATIONS MAY CAUSE HARM TO PEOPLE OR OBJECTS.
IF YOU DO NOT UNDERSTAND ANY PART OF THESE INSTRUCTIONS, DO NOT ATTEMPT TO INSTALL OR OPERATE THIS MIXER. CONTACT GREC SRL FOR ANY PROBLEM.

4.1 - Moving and Lifting

- Use suitable lifting devices only. Do NOT attempt to lift the mixer by hand if it weighs more than 20 kg.

4.2 - Connecting the power supply

- Do not connect the motor to the power supply until all components have been assembled, the mixer has been installed and all the bolts have been tightened to the values specified in the manual.
- Do not touch the mixer or the power cable if you have wet hands or feet or if you are in contact with a wet or damp surface.
- Before performing any maintenance, unplug the power supply.

4.3 - Use

- Always check that lubricant is present in the gearbox, bearings and mechanical seal where necessary according to the manual.
- Assemble all protections that ensure that it is not possible to touch moving parts of the mixer (shaft, motor, impellers, seal, gaskets etc.) with hands or any part of the body.
- Do not use the mixer for purposes other than those envisaged. Do not operate the sealing system at temperatures or pressures higher than those specified.
- BEFORE operating the mixer, it is very important to check the following:
  - ensure that the mixer is connected to the earthing network
  - ensure that all safety devices (butt straps etc.) are installed.
  - ensure that all removable parts are firmly secured.
  - read the instructions provided with the mixer carefully.
  - ensure that the rotating parts are free of obstacles, by rotating the mixer by hand.
  - ensure that all external connections (electrical, hydraulic, pneumatic etc.) have been made according to current regulations.
  - DO NOT ENTER the tank unless the motor is disconnected and the mixing shaft is firmly secured to the mixer or supported from below.

4.4 - Maintenance

- Do not make any change to the mixer (installed power, rotation speed, shaft length, impellers etc.) without consulting GREC SRL.
- Unplug the motor from the power supply before performing any maintenance.
- When repairing the mixer or replacing parts, use only procedures and components approved by GREC SRL.
- Do not touch the mixer motor or the top of the mixing shaft unless they have been left to cool for at least an hour.

To perform maintenance in areas that are not easily accessible or hazardous, ensure adequate safety for those performing maintenance and others in compliance with applicable laws regarding safety in the workplace.
Maintenance, inspection and repairs may only be performed by
experienced maintenance technicians, aware of dangerous conditions. It is therefore necessary to provide operating procedures
for the complete machine aimed at managing the dangerous situations that could arise
and methods for preventing them. The experienced maintenance technician should always work very carefully, paying close attention and carefully following the safety rules.
During operation wear only clothes and/or individual safety equipment indicated
in the instructions for use provided by the Manufacturer and by applicable laws on safety at work.
Replace worn components using original spare parts. Use oils and greases recommended by the Manufacturer.
Do not dispose of polluting materials into the environment. Dispose of these materials in compliance with applicable laws on this matter.

After replacing the lubricants, clean the surfaces of the gearbox and the floor around to the working area.

4.5 - Electric motor

Low voltage motors are intended for industrial plants and comply with harmonised standards EN 60034/IEC34. If not expressively indicated, use is prohibited in classified areas due to danger of explosion and fire. The motors are suitable for room temperatures ranging between -20°C and +40°C and places with altitude up to 1,000 m a.s.l.

⚠ Carefully check the data indicated on the plate before commissioning the motor. Low voltage motors are considered as components to be installed in other machines according to Machinery Directive 2006/42/EC. Their commission is prohibited until conformity to this directive is demonstrated. The rotating electrical machines, powered from the mains, comply with standards EN 50081 and EN 50082 regarding electromagnetic compatibility phenomena - Directive 2004/108/EC. No special shielding measures are required. In the event of intermittent operation, any interference generated by the insertion devices must be limited using suitable wiring.

⚠ Operations on the electrical machine must be carried out with the machine stopped and disconnected from the mains (including the auxiliary equipment). In the presence of electrical protection devices, prevent sudden restarts, complying with the specific recommendations on the use of the various devices.

⚠ Electrical connection operations must be carried out by qualified personnel, with motor stopped and disconnected, and with no chance this can be restarted. The rotor is balanced dynamically with half key. The coupling components must be balanced with half key on smooth spindle. Joints and pulleys must be mounted with specific equipment in order to not damage the motor bearings. After assembly
check that the coupling components are fixed on the shaft end and pushed against the stop. If the hub of the coupling component is shorter than the end of the shaft, the difference can be compensated by a spacer bushing. Too small or too large pulleys compromise the proper operation of the bearings. The motors must be installed to allow the cooling air to enter and exit easily. Ventilation must not be prevented and the exhaust air, also the adjacent units, must not be re-suctioned by the fan. Prevent heat sources from affecting the air and motor temperature. In the event of indoor installation, protect the motor from solar radiation and bad weather with suitable devices. We recommend protecting the motor with motor protection devices and torque electronic limiters if the motor is not equipped with thermistors. In the presence of extreme temperature changes and condensation, the motor must be equipped with condensation heaters and drain holes made according to the installation position.

⚠ The electrical connection must always be carried out by qualified personnel, in compliance with the applicable EEI, EN 60204 and possible local regulations.

⚠ Always refer to the data on the voltage and frequency plate, in order to ensure a correct connection with the power supply network. If not specified, tolerance can be of ±5% on the voltage and ±1% on the frequency values indicated in the plate. The connection diagrams are normally provided with the motor or are printed in the terminal box. Should they be missing, refer to those provided in the manual.

5 - INSTRUCTIONS FOR STORAGE

FAILURE TO COMPLY WITH THE FOLLOWING RECOMMENDATIONS FOR STORAGE AND PROTECTION MAY INVALIDATE ANY IMPLICIT OR EXPLICIT WARRANTIES.

5.1 – General Instructions

- Upon receipt of your mixer, check for any damage caused by shipping and report any problems to the carrier and to our factory.
- All unpainted steel parts are coated with a protective layer which can be easily removed using kerosene or another solvent.
- Do not remove any protection if the mixer is to be placed in storage before being installed. Store the mixer in a clean, dry place, with air circulation which is not subject to rapid, considerable changes in temperature.
- If storage continues for more than a year, check the condition of the gearbox lubricant before putting the mixer into service.

5.2 – Recommendations for prolonged storage

GREC SRL mixers must be protected against corrosion during prolonged periods of inactivity. The main cause of corrosion is the condensation formed due to high humidity and/or temperature changes.
The machines therefore have to be stored properly in a clean, dry place.
Electric motors must never be stored outdoors. In the event of prolonged inactivity, refer to the manufacturer's recommendations and check for condensation, removing it if necessary.
The mechanical seal (if fitted) is not filled with lubricant (if necessary). Refer to the seal maintenance section for instructions.
For storage over 6 months, it is necessary to fill the gearbox to the top with oil to protect internal parts and seals against corrosion.

5.2.1 - STORING EQUIPMENT WITH RUBBER OR EBONITE-COATED SHAFTS AND IMPELLERS

The following instructions must be complied with for all coated mixers that remain in storage prior to installation and commissioning for a period exceeding three months.
Proper storage of coated components should take place in closed storerooms where the temperature never drops below 0 °C.
Where coated shafts and impellers must remain in storage for longer than three months, it is advisable to protect the coating from solar radiation (light and UV rays).
If storage must last for over a year, components with cavities must be filled periodically with water and it should be ensured that they remain full.
If it is impossible to store coated shafts and impellers in closed storerooms, it is possible to use outdoor storage, carefully following the recommendations depending on environmental temperatures.
<u>Storage in cold climates</u>
Equipment must be packed in wooden crates with a minimum thickness of 30 mm and a layer of waterproof paper inside them.
Crates must be placed directly in close contact with the ground, making sure not to leave spaces below in order to exclude air infiltration. They must be close together so as not to leave spaces between them. The crates must then be fully covered with waterproof sheets without slits or tears. The sheets must be properly anchored to the ground and sealed. When sizing the crates, it is advisable to bear in mind the extra weight caused by any snowfall. It is advisable not to handle coated equipment or stress it mechanically in any way when the ambient temperature is below 0 °C.
<u>Storage in temperate or hot climate countries</u>
The components of the mixers that are coated with rubber or ebonite and which have cavities must be capped, completely filled with water, checking periodically that they remain full. All equipment must be covered with sheets, making sure, for the parts normally exposed to sunlight, that an air chamber is created between the sheet and the equipment itself to limit the rising heat. This chamber can be made with wooden frames or with metal scaffolding.

6 - INSTALLATION

6.1 - Identification

Upon receipt of the mixer, check that the package is intact.
After unpacking, make sure that there is no transport damage (check the linearity of the shafts in particular).
If the mixer is damaged, draw up a report countersigned by the carrier or at least write “conditional acceptance” on the shipping document. DO NOT install the mixer and notify GREC Srl within three working days.

Note data from the machine identification plate, present on the machine itself, and check that this coincides with that given on the drawings. Remember to always quote the serial number located on the plate for any communication with the manufacturer.

It must always be possible to read all the data shown on the identification plate,
and the plate must be cleaned periodically.
If the plate deteriorates and/or is no longer legible, even as regards a single set of data elements, it is recommended to request a new one from the manufacturer, quoting the data contained in this manual, and replace it.

6.2 - Handling

The mixer should be handled with care using appropriate lifting systems.
Do not lift the mixer by its fragile components (terminal boxes, knobs etc.) and **do not use any eye bolts installed on the motor, gearbox, variator etc.** These eyebolts are only to be used for lifting the component to which they are connected when this is separated from the rest of the machine. Do not use the mixer shaft either. If this bends, it could cause vibration and damage to the mixer itself and to the tank.
The best way to lift the mixer is to sling the motor, or even better the spider, if any, properly.
Be careful not to bump or handle any mechanical shaft seal.
If the shaft or other parts are coated with rubber, PTFE, PVC or similar, due to the high fragility of these materials, we recommend only removing the protective cover when installation is completed.

Place the machine in position following these rules for moving:

◊ Secure all parts that could come loose or fall out of the machine.
◊ Remove any accessories affixed to the machine.
◊ Make sure there is enough space for moving the machine and the lifting system.
◊ Lift the machine carefully
◊ The transport operation must be performed by specialised personnel.

Some important rules to be followed:

1 - Ensure that the mixer support plate is level: an angle of the support that does not exceed a maximum offset of 1 mm from the vertical geometry is tolerated for every metre of shaft length.

2 - Another important aspect of installation is that the support should be as rigid as possible to prevent any degree of freedom of the structure from causing unwanted stresses on the rotating machine, amplifying the stress of the shaft and bearings.

A SUPPORT THAT IS TOO WEAK MAY LEAD TO THE BREAKAGE OF THE SHAFT OR ANY OTHER MECHANICAL PART OF THE MACHINE IN A SHORT SPACE OF TIME.

All stages of installation must be considered, from the creation of the general design. The person authorised to perform such work must, if necessary, implement a “safety plan” to ensure the safety of the people involved and apply all existing laws to the letter.

3 - Clean any packaging residues and any protective products from the gearbox. Pay particular attention to the coupling surfaces.
4 - Check correct shaft/shaft or shaft/hole alignment.
5 - Provide adequate safety protections devices for the rotating parts outside the gearbox.

6.3 – Assembly and Disassembly for Maintenance

6.3.1 Preliminary checks

- Check that the data on the identification plate matches that in the technical specification
- Check the oil level in the gearbox and that there are no visible leaks
- Check that the rated voltage and current are compatible with those available
- Position any safety guards
- Check for and remove any moisture on the motors after prolonged storage
- Check to see if the mixer is designed to operate at constant or variable level, and if breakwaters are required
- Ensure that the mixer cannot start up accidentally

6.3.2 Positioning

Before installing the mixer, it is necessary to verify the following:

- The space available around and above the tank/container, taking into account the length of the shaft and the space required for cooling the motor.
- The rigidity and appropriate size of the mixer support structure, considering the static and dynamic loads. The mixer must not vibrate or oscillate during operation.
- If being installed outdoors, the motor must be protected from rain and direct sunlight.
- The size of the openings in the tank for the introduction of the impellers, drains etc.

6.3.3 Securing

The mixer must be securely attached to its support by bolts, clamps or other suitable devices. The bolts must always be the maximum size allowed by the attachment point provided on the mixer.

The mixer consists of a control unit and a mixing unit.

The **control unit** consists of motor, gearbox or spider, and seal system.
If there are no special reasons agreed upon with the Customer, the control unit is shipped already assembled, ready to be erected and placed on the tank or container plate.
The interfaces available are the tank fixing flange and connection joint between control unit and mixing unit.
For AVL, AVF, AVC models, no joint is available if the gearbox is with hollow shaft and the seal system is with lip or missing. The mixing unit shaft is inserted automatically in the gearbox hollow and it is fixed with the attached screws.
For models with or without mechanical retainer but with protruding shaft (AVS, AVSh, AVSm), or in the presence of base guides, use a joint to the shaft, which can be a sleeve (economic for smaller sizes) or flanged (easier to dismantle).

The **mixing unit** is usually composed of two main parts:
shaft (in one or more sections), one or more impellers, base guide (if any).
Different shaft sections are connected by flanged joints.

6.3.4 Vertical mixer with Base guide

The base guide is the last component to be installed and its support is made depending on the position of the mixer shaft. It is essential to ensure that the shaft and the bushes are perfectly in line and that, when the shaft is turned by hand, there is no friction between it and the bushes.

IMPORTANT: THE GUIDE MUST NEVER BE OPERATED DRY, BUT MUST BE LUBRICATED BY THE CONTENTS OF THE TANK OR OTHER LIQUID.

1.1. The base guide is designed to ensure long service life. The service life of the wear bushing is influenced by many factors and can vary greatly even in installations that are similar.
1.2. Excessive wear can affect the proper operation of the mixer and cause damage to other components, therefore it is important to carry out initial tests to estimate the average life expectancy and consequently the inspection and/or maintenance intervals.
1.3. In any case, we recommend checking the conditions of the guide at least once a year.
THE BASE GUIDE DRAWING WITH THE INSTALLATION INSTRUCTIONS IS ALWAYS SENT DURING THE ORDER STAGE.

6.3.5 Maintenance

Operations different from the assembly may be required if maintenance of the machine is needed. It can be carried out on the gearbox or on the sealing system

6.3.6 Possible configurations of the control unit

SERIAL		NUMBER	SEAL	STOOL	SHUT OFF	SHAFT JOINT	CHARACTERISTIC
1	SIDE	AL, ALF	Inside the tank	No	No	No	Economic
2		ALF, ALC	With cartridge	Yes	No	No	Possible maintenance without accessing the tank
3		ALC	With cartridge	Yes	Yes	No	Possible maintenance without emptying the tank
4	VERTICAL	AVS1÷4	No	No	No	With sleeve	Economic
5		AVS5÷11, AVSm, AVSh	No	No	No	Flanged	Easier to dismantle
6		AVF, AVL, AVC	No / With lip	Yes/No	No	No	Simple and economic
7		AVF, AVL, AVC	With cartridge	Yes	No	Flanged	Standard solution
8		AVF, AVL, AVC	With cartridge	Yes	No	No	Solution for hygienic environment
9		AVL, AVC	With cartridge	Yes	Yes	Flanged within the stool	Seal replacement with gearbox in position
10		AVS	With cartridge	Yes	Yes	Spacer within the stool	Seal replacement with gearbox in position
11		AVS	Hydraulic guard	Yes	No	Flanged	Economic solution for P< 0.05 barg

1
Side mixer with seal immersed in the product, AL, ALF series

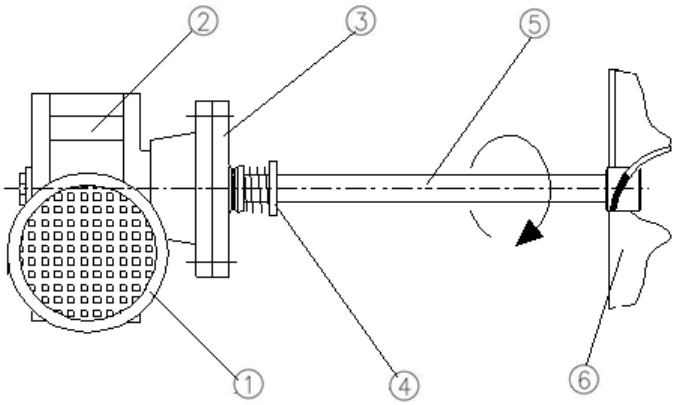

Pos	Description
1	Electric motor
2	Reduction gear/Spider
3	Flange
4	Mechanical seal
5	Shaft
6	Impeller

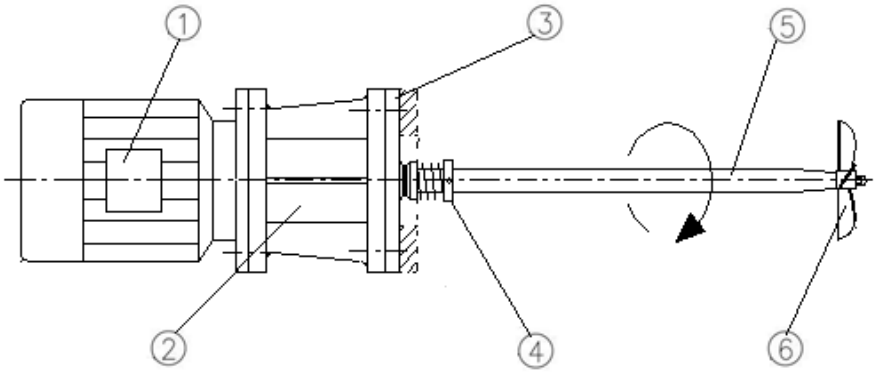

This is generally shipped fully assembled with the possible exception of the impeller if its diameter exceeds that of the connection flange.
Assembly takes place by simply inserting the shaft in the assembly flange and securing it.
Most side mixers are equipped with the tank fixing flange and on the side with a threaded hole on the side with a cap and/or (on the opposite side at 180°) a small rectangular hole.

- The threaded hole with cap should be placed in the upper part. (replace the cap with a tap for air bleeding and/or mechanical seal washing, if necessary)
- The small rectangular hole should be placed at the bottom (this is used for draining any leaks from the mechanical seal. It should never be closed. In the event of product leakage, check the mechanical seal).

If the impeller (6) is dismantled, access the tank from the manhole and tighten with the dowels supplied in radial position.

The ALF mixer is normally installed with protruding motor on the bottom right to compensate dynamic loads.
If the tank connection is inside the sleeve, in order to ensure lack of interference with it, configuration with the motor facing downwards and the threaded and rectangular hole in different positions can be made upon request.
ALF5 and ALF6 models must be filled with different amount of oil.

2
Side mixer with stool and cartridge mechanical seal, ALF and ALC series

Pos	Description
1	Electric motor
2	Reduction gear
3	stool
4	Cartridge seal
5	Flange
6	Shaft
7	Impeller

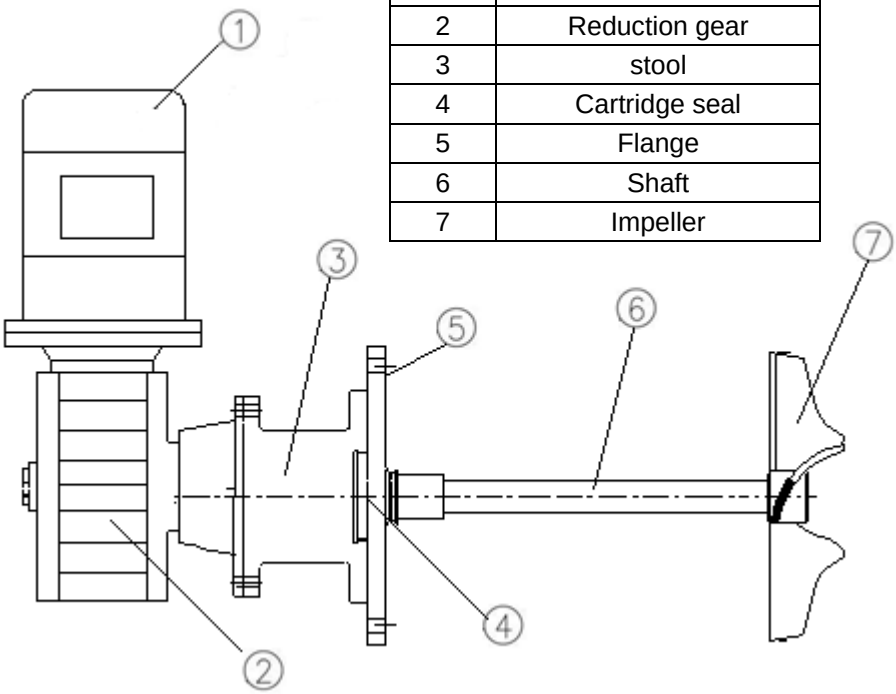

Generally, it is shipped fully assembled, except for the impeller (7), which will be tightened inside the tank with the supplied dowels in radiant position.

Leave the vent cap of the cartridge seal open when filling the tank and tighten this cap as soon as the first drops leak.
Any leakage from the seal is visible externally from the stool.

In the event double mechanical seal is fitted, flow it with different methods depending on the process conditions.
- Running pressurised water for low pressure cooling or in the presence of solid bodies.
- With pressurised cask for high pressure cooling or in the presence of ATEX environment
- With atmospheric cask for atmospheric pressure cooling

The double seal version can be fitted also in bottom entry version, with the shaft upwards.

Normally the ALF mixer is installed with high motor.
If the tank connection is inside the sleeve, in order to ensure lack of interference with it, configuration with the motor facing downwards and by introducing the correct amount of oil in the reduction gear.

The replacement of the cartridge seal is described in pos. 3, without the activation of the shut-off valve, which is missing. In this case, empty the tank below the mixer axis.

3

Side mixer with stool, cartridge mechanical seal and SHUT OFF, ALC series

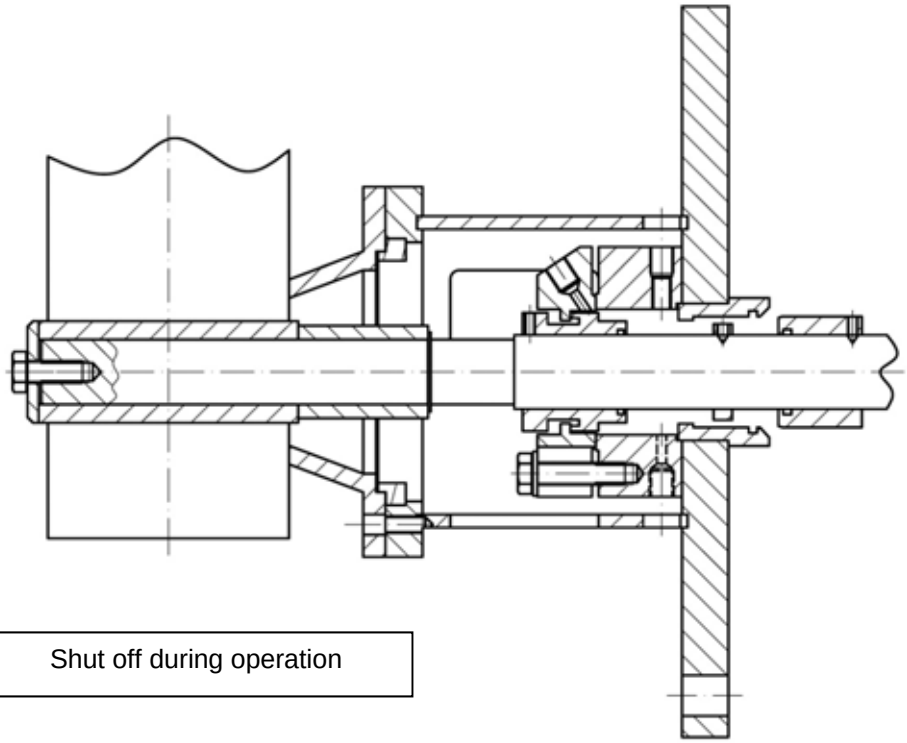

Shut off during operation

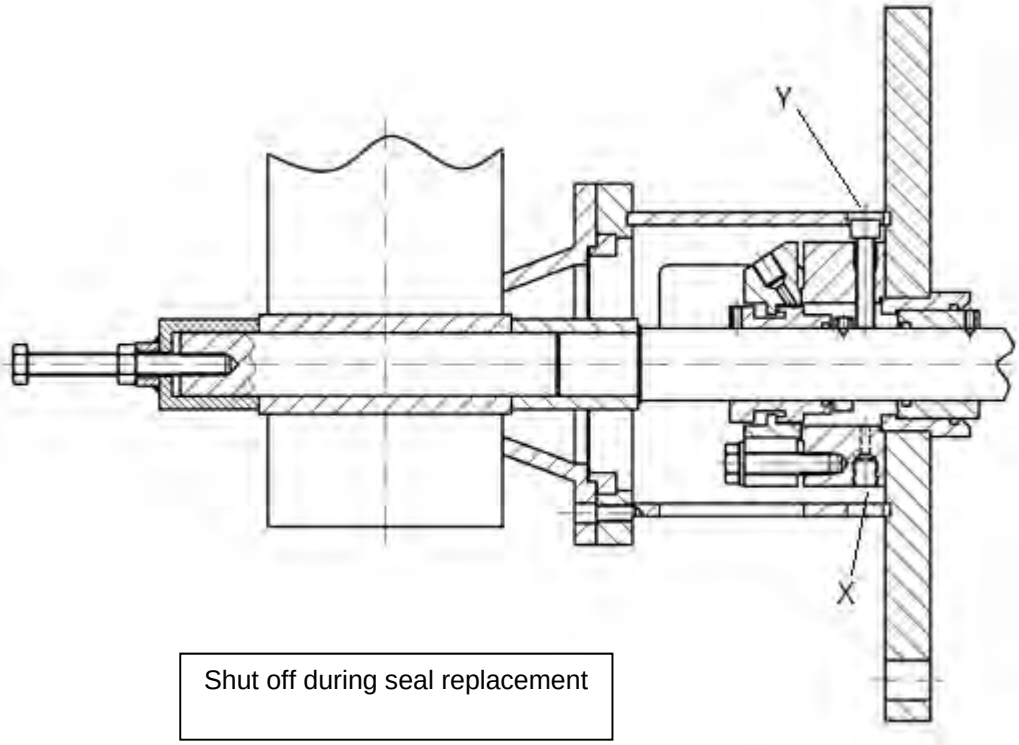

Shut off during seal replacement

Removal of the mechanical seal with Shut off system

The operations described in the following instructions must be carried out when the tank on which the mixer is installed contains a liquid, whose level exceeds that of the mixer.
In the event the liquid level is lower than that of the mixer, remove the mixer from the tank and perform its maintenance in the workshop.

1) Disconnect power supply from the mixer motor and make sure all safety measures have been taken in order to prevent accidental activation during maintenance operations.

2) Remove the protection grids from the two windows of the base, where the mechanical seal is found.

3) Remove the protection cover of the hollow shaft placed on the reduction gear.

4) Apply the axial locking device/s of the mechanical seal rotary part. Upon request, and if deemed useful, to facilitate the operation, rotate the mixer shaft with the screw placed behind the reduction gear at the end of the shaft or manually rotate the electric motor via the cooling fan, after having removed the fan cover cap.

5) Loosen (by one turn at least) the dowels that fasten the mechanical seal sleeve to the mixer shaft.

6) Loosen (by two turns at least) the screws on the head of the mixer shaft and push the latter inside the tank by about 1-2 mm. In the event the pressure inside the tank pushes the shaft outwards, try to keep it still (generally, the strength of your hand should be enough).

7) Remove the seeger ring from its seat via the window of the base where the mechanical seal is found. The seeger ring is placed between the reduction gear and seal; slide it along the shaft until it reaches the end of travel.

8) Move the shaft backwards, towards the outside of the tank, until the shut-off device is started, thus braking the shaft movement. One of the following manoeuvres is required in order to perform this operation, according to the pressure of the liquid inside the tank exerted on the shaft.

   Event a) Pressure is sufficient to push the shaft out.

   Brake the shaft displacement until it reaches the end of travel without violent shocks.

   Event b) Pressure is NOT sufficient to push the shaft out.

   Pull the shaft outwards the tank with your hand or use the specific tool supplied, if required, paying attention the shaft key matches the tool slot.

9) Loosen cap X until a small amount of liquid leaks.

10) Keep moving the shaft backwards, until the seeger ring meets the spacer bushing adjacent to the reduction gear hollow shaft. Now, go to the next step if no liquid leaks from the seat of cap X. *If liquid keeps leaking, it means that the shut-off system is damaged. Therefore, to replace the mechanical seal, empty the tank and remove the entire mixer for complete maintenance.*

11) Fully remove cap X in the lower position and tighten screw Y of suitable length in the upper position in order to touch the shaft. Do not tighten excessively the screw to prevent the shaft from damage. This screw prevents the shaft from moving axially.
12) Loosen and remove the four screws that fasten the mechanical seal to the base.
13) Remove the reduction gear from the base, where the mechanical seal is found, removing the reduction gear from the shaft without exerting radial force on the shaft.
14) Remove the key from the shaft, together with the spacer bushing and the seeger ring.
15) Accurately clean the shaft where the mechanical seal will slide to be removed.
16) Remove the mechanical seal

Installation of the mechanical seal with Shut-off system

1) Accurately clean and grease the shaft where the mechanical seal will slide to be installed.
2) Make sure the mechanical seal is equipped with locking devices in the rotary part and that the dowels that fasten the sleeve to the shaft are sufficiently loosen to allow the shaft passage.
3) Place the mechanical seal on the shaft paying attention not to damage the seal O-Ring when it meets the step caused by the diameter variation of the shaft. Do not fasten the seal to the base.
4) Place the Seeger ring and the spacer bushing on the shaft and then the key on its end, following this sequence.
5) Install the reduction gear on the shaft without exerting radial force on the shaft and fasten it to the base, where the mechanical seal is found, with the bolts.
6) Fasten the mechanical seal to the base with the four supplied screws, placing it so the locking device can be removed afterwards (NOT now).
7) Remove screw Y and replace it with a cap. Tighten this cap so to allow the air to be suctioned in the shut-off chamber, when the shaft is moved inside the tank.
8) Close cap “X”.
9) Slowly push the shaft inside the tank until liquid leaks from the seat of cap “Y”.
10) Fully tighten cap “Y” until the leak stops.
11) Further push the shaft inside the tank until the seeger can be placed in its seat (the shaft edge is now about 2 mm below the beginning of the reduction gear hollow shaft).
12) Place the Seeger in its seat.
13) Fully tighten the screw on the shaft head with its washer resting on the reduction gear hollow shaft.
14) Fully tighten the three dowels that fasten the mechanical seal sleeve to the mixer shaft.
15) Remove the axial locking device/s of the mechanical seal rotary part. Upon request, and if deemed useful, to facilitate the operation, rotate the mixer shaft with the screw placed behind the reduction gear at the end of the shaft or manually rotate the electric motor via the cooling fan, after having removed the fan cover cap.
16) Install the protection cover of the hollow shaft placed on the reduction gear and install the fan cover cap of the motor if it was previously removed.
17) Install the protection grids of the two windows of the base, where the mechanical seal is found.

4

Vertical mixer without seal, sleeve joint fixing system, AVS1÷4 series

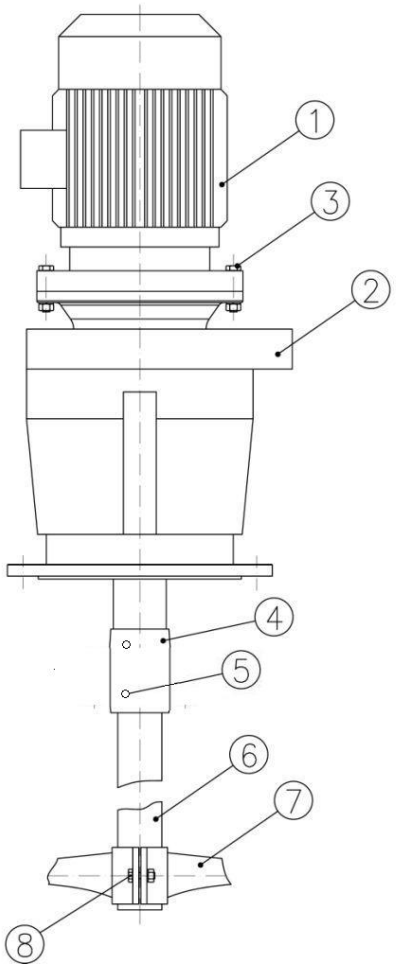

Pos	Description
1	Electric motor
2	Reduction gear
3	Fixing screw
4	Sleeve joint
5	Dowels
6	Shaft
7	Impeller
8	Securing of the impeller

A) ASSEMBLY

1 - The motor and the sleeve joint are already secured to the reduction gear
2 - Secure the geared motor unit to the support beam (the reduction gear flange has a centring mark)
3 - Insert the shaft (6) into the sleeve joint (5) and tighten the fitted dowels
4 - Secure the impeller (7) to the shaft

5

Vertical mixer without seal, flanged joint fixing system, AVS5÷11, AVSm, AVSh series.

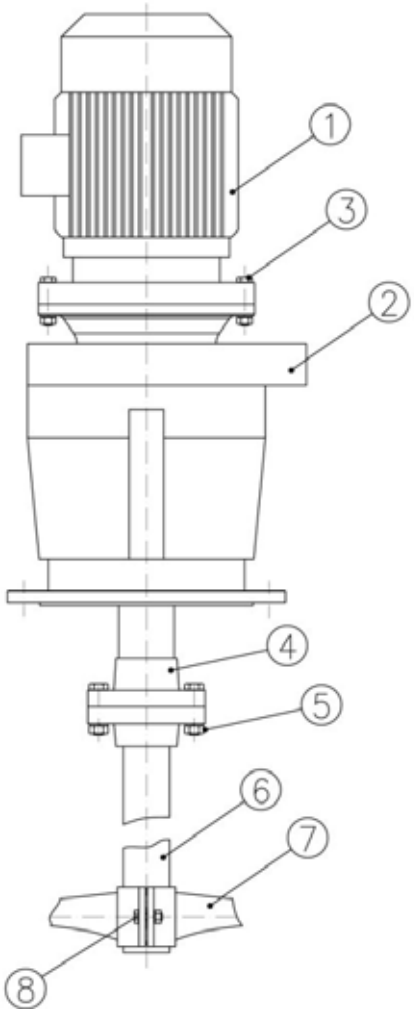

Pos	Description
1	Electric motor
2	Reduction gear
3	Fixing screw
4	Flanged joint
5	Fixing screw
6	Shaft
7	Impeller
8	Securing of the impeller

A) ASSEMBLY

1 - The motor and the flanged hub are already secured to the reduction gear
2 - Secure the geared motor unit to the support beam (the reduction gear flange has a centring mark)
3 - Couple the shaft hub with the hub protruding from the reduction gear and tighten the fixing screws
4 - Secure the impeller (7) to the shaft

6

Vertical mixer with lip seal (or without seal), without stool, series AVF, AVL, AVC with hollow shaft

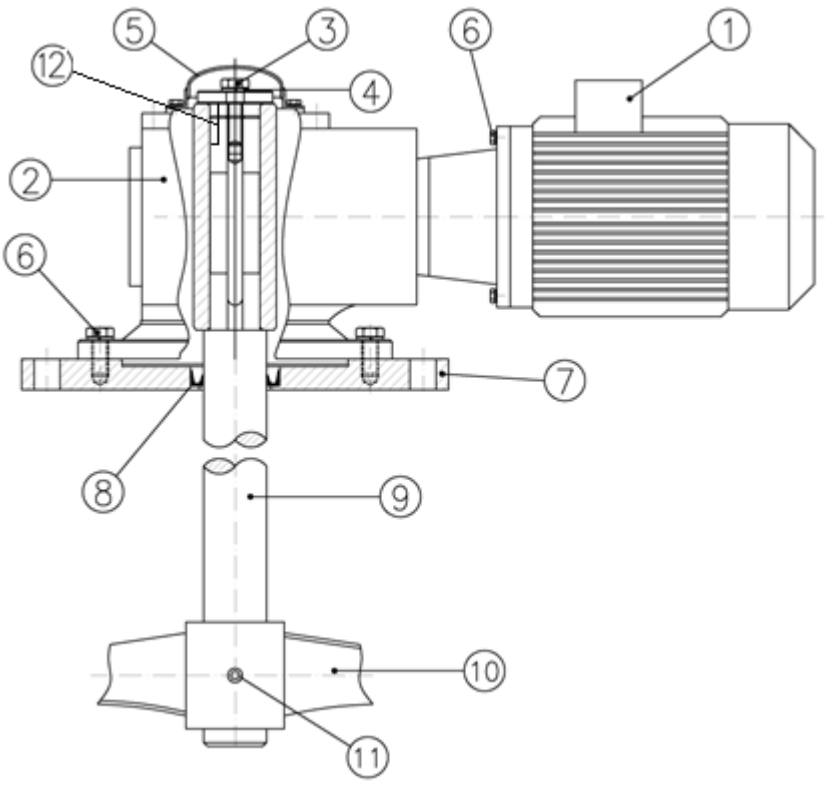

Pos	Description
1	Electric motor
2	Reduction gear
3	Fixing screw
4	Fixing washer
5	Protection
6	Fixing screw
7	Connection flange
8	Radial seal inserted in the flange
9	Shaft
10	Impeller
11	Securing of the impeller
12	Anti-rotational key

A) ASSEMBLY

1-Insert the shaft (9) and the impeller (10) in the tank

2 -The shaft (9) has a threaded hole in the head. For considerably heavy shafts, it is necessary to secure an eyebolt in order to use lifting chain, which must pass into the reduction gear hollow shaft.

Wrap the part of the shaft with the hollow key with a thin ribbon and spread with lubricant

Lift the shaft, carefully passing it through the flange (7), the seal (8) and the hollow shaft of the reduction gear (2).

3- Once the shaft touches the end of travel of the reduction gear bottom, insert the anti-rotational key (12), if not already inserted in the hollow of the shaft. Then insert the upper locking ring (4) and tighten the screw head (3).

4- Protect the exposed rotating part with a cover (5).

5- Secure the flange (7) of gear motor unit to the tank flange having the same dimensions.

6- For mixers without seals, the procedure is the same, but without components (7) and (8)

7-For mixers with lip or stool seal, the procedure is the same. The stool is used to separate the reducer from a very hot tank roof, to allow the shaft to be cooled.

B) REPLACEMENT OF THE REDUCTION GEAR

1-Dismantle the motor (1) from the reduction gear (2) if needed

2-Carefully loosen the screw (3), slowly lowering the shaft until it rests inside the tank

3-Remove the screw (3), washer (4) and key (12).

3-Unbolt the reduction gear from the flange (7) and take it to maintenance

C) REPLACEMENT OF THE SEAL

1-Once the reduction gear has been taken off, remove the radial seal (8) by hand

7

Vertical mixer with cartridge seal, stool, flanged joint within the process, AVF, AVL, AVC series

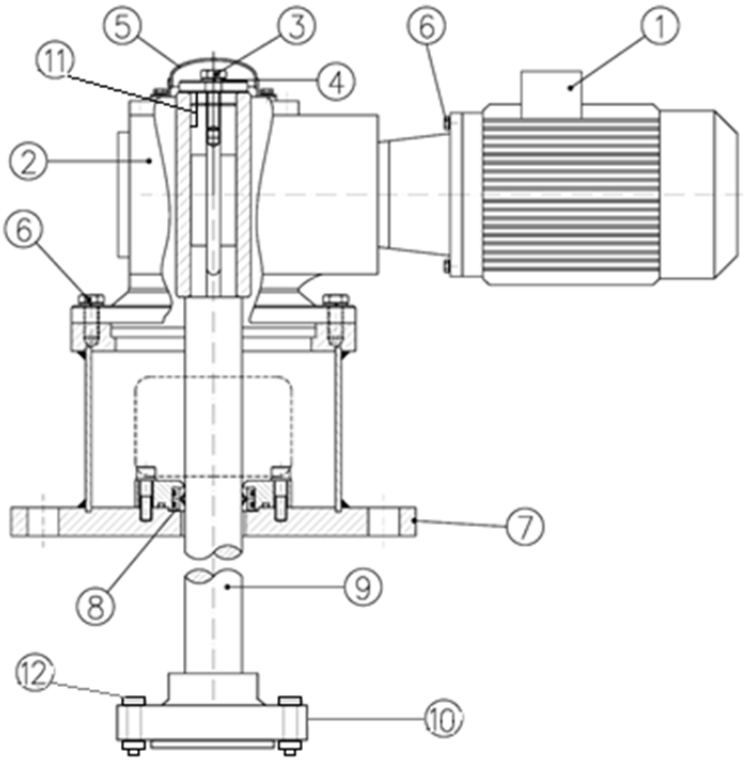

Pos	Description
1	Electric motor
2	Reduction gear
3	Fixing screw
4	Fixing washer
5	Protection
6	Stool
7	Connection flange
8	Cartridge seal
9	Shaft
10	Flanged joint
11	Anti-rotational key
12	Fixing screw

This configuration allows you to obtain an economical solution, especially for smaller sizes.
The guide unit travels with the seal already mounted to facilitate installation; however, maintenance of the reduction gear or seal must be carried out in the workshop, removing the entire driving set from the tank.

A) ASSEMBLY
1-Insert the shaft and the impeller in the tank
2- Secure the flange (7) of gear motor unit to the tank flange having the same dimensions.
3-Lift the shaft matching the two faces of the flanged joints (10) and tighten the fixing screws (12)
4-Fit the impellers

B) REPLACEMENT OF THE REDUCTION GEAR AND THE SEAL
1-Remove the shaft from the flanged joint, placing it inside the tank
2-Remove the geared motor unit and take it to the workshop
3-Loosen the bolts of the mechanical seal (8)
4-Carefully loosen the screw (3), passing the shaft (9) through the seal (8)
5-Remove the screw (3) and the washer (4)
6-Dismount the motor (1) and reduction gear (2)
7-Remove and replace, if required, the mechanical seal (8)

8

Vertical mixer (hygienic version) with cartridge seal, stool, without flanged joint within the process, AVF, AVL, AVC series

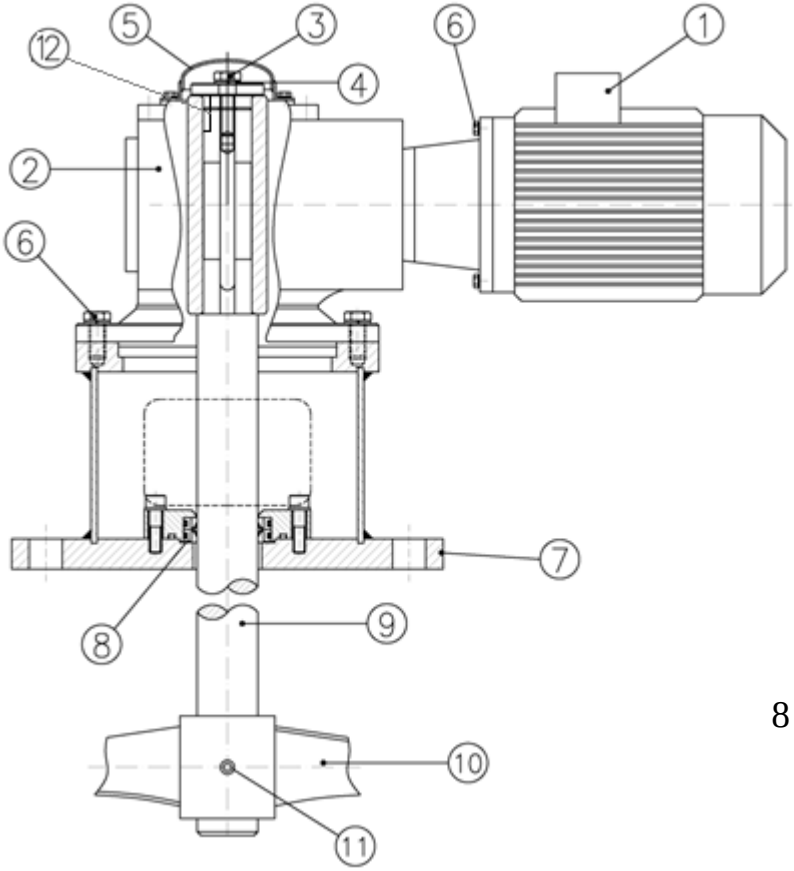

Pos	Description
1	Electric motor
2	Reduction gear
3	Fixing screw
4	Fixing washer
5	Protection
6	Stool
7	Connection flange
8	Cartridge seal
9	Shaft
10	Impeller
11	Securing of the impeller
12	Anti-rotational key
13	Split support ring

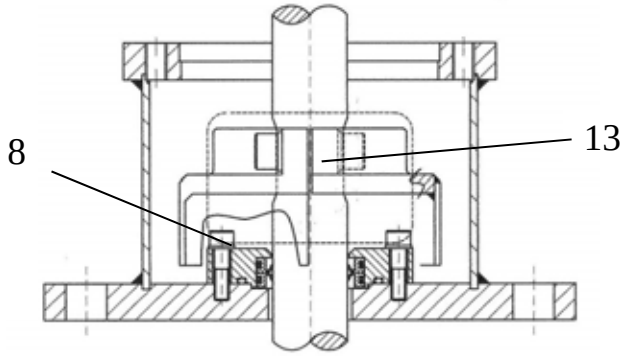

A) ASSEMBLY

1-Insert the shaft (9) and the impeller (10) in the tank

2- Secure the flange (7) of gear motor unit to the tank flange having the same dimensions.

3 -The shaft (9) has a threaded hole in the head. For considerably heavy shafts, it is necessary to secure an eyebolt in order to use lifting chain, which must pass into the reduction gear hollow shaft.

Wrap the part of the shaft with the hollow key with a thin ribbon and spread with lubricant

Lift the shaft, carefully passing it through the flange (7), the seal (8) and the hollow shaft of the reduction gear (2).

ATTENTION: the sealing surfaces of the fixed and rotating seats are lapped with a mirror finish. It is vital that they are handled with care and kept perfectly clean.

Lubricate with silicone grease and slide the mechanical seal onto the shaft, taking care not to damage it.

4- Once the shaft has reached the end of travel on the bottom of the reduction gear, secure the shaft support collar (13), making sure that the dowels are in line with the marks made on the shaft and trace the shaft to allow the collar (13) to rest on the flange (7).

5-Remove the eyebolt and insert the anti-rotational key (12), if not already inserted in the specific hollow shaft. Then insert the upper locking ring (4) and tighten the screw head (3).

6- Protect the exposed rotating part with a cover (5).

B) REPLACEMENT OF THE REDUCTION GEAR

1-Dismantle the motor from the reduction gear, if needed
2-Carefully loosen the screw (3), slowly lowering the shaft until the support ring (13) rests on the flange (7)
3-Remove the screw (3), washer (4) and key (12).
3-Unbolt the reduction gear from the stool (6) and take it to maintenance

C) REPLACEMENT OF THE SEAL

1-Dismantle and remove the support ring (12)
2-Dismantle and lift the cartridge seal (8) up to under the reduction gear
3-Fit back the support ring (12) under the seal
4-Dismantle the reduction gear according to procedure B
5-Replace / maintain the cartridge (8),
6-Fit back the reduction gear according to procedure A
7-Dismantle and remove the support ring (12)
8-Secure the cartridge (18) to the flange (7)
9-Fit back the support ring (8)

9

Vertical mixer with cartridge seal, stool, flanged joint within the stool to remove the seal without touching the reduction gear, AVL, AVC series

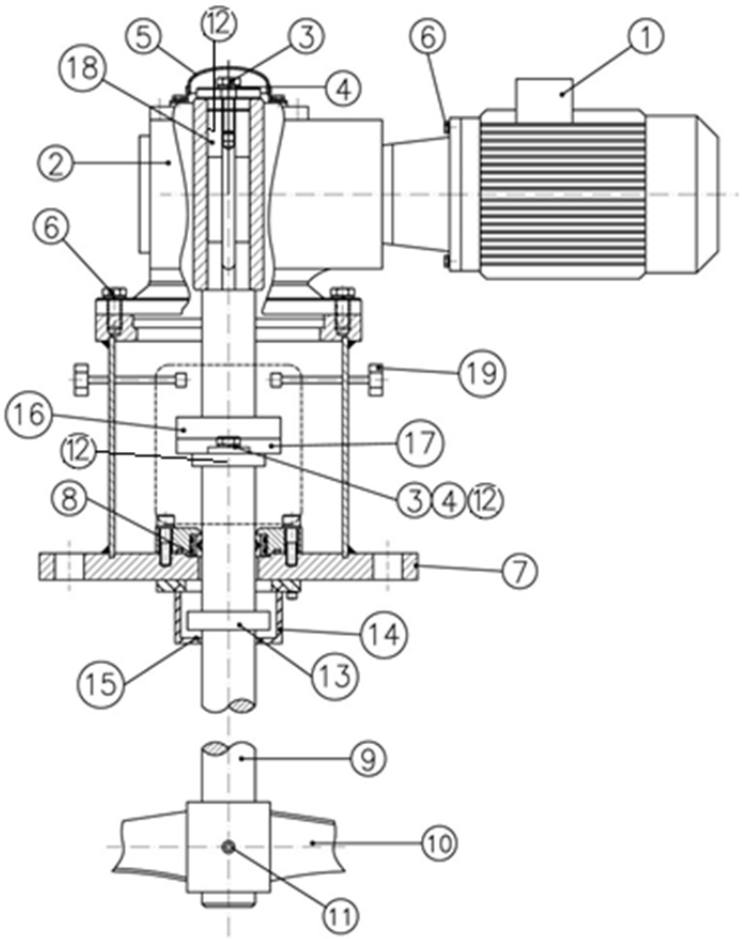

Pos	Description
1	Electric motor
2	Reduction gear
3	Fixing screw
4	Fixing washer
5	Protection
6	Stool
7	Connection flange
8	Cartridge seal
9	Shaft
10	Impeller blades
11	Impeller hub
12	Anti-rotational key
13	Shut off rotating part
14	Shut off stationary part
15	O ring
16	Welded flanged
17	Dismantling flange
18	Guide shaft
19	Guide shaft retainers

For larger mixers, it is better to replace the mechanical seal without intervening on the geared motor unit.
This is why a higher spider is made to receive a flanged joint and leave the space to remove the seal through the side windows.
The mechanical seal is mounted together with the flange and stool, which are separated by the driving set.
The shut off prevents pressure loss from the tank during the maintenance phases.

A) ASSEMBLY

1-Insert the shaft (9) and the impeller (10) in the tank
2- Secure the flange (7) of seal unit to the tank flange having the same dimensions.
3-Isert the fixed part (14) on the shaft and the rotating part (13) on the shut off. Fasten the latter making sure that the dowels are aligned with the marks made on the shaft.
4- The shaft (9) has a threaded hole on the head, to which an eyebolt is secured in order to use the lifting chain. Wrap the part of the shaft with the hollow key with a thin ribbon and spread with lubricant
Lift the shaft and carefully make it pass through the flange (7) and seal (8).

ATTENTION: the seal surface of the fixed and rotating seat are lapped with finish. Lubricate with silicon grease and slide the mechanical seal on the shaft paying attention not to damage it.

5- Once the shut off has reached the bottom of the flange, secure it to the flange and lower the shaft with the rotating part of the shut off (13) on the fixed part (14).
6-Remove the eyebolt
7-If not already on the hollow of the shaft, insert the anti-rotational key (12) and removable flange (17). Then insert the upper locking ring (4) and tighten the screw head (3).
8-Mount the driving set (1+2), lowering the guide shaft (18) into the stool (6) and tightening the bolts between reduction gear flange and stool flange.
9-Insert the bolts in the flanged joint (16+17) and, by tightening them, lift the shaft by a few millilitres to separate the two components (13 and 14) of the shut off and proceed assembling.

B) REPLACEMENT OF THE REDUCTION GEAR

1-Dismantle the motor from the reduction gear, if needed
2-Slowly remove the screws of the flanged joint, making the rotating part of the shut off (13) rest on the stationary part (14)
3-Remove the screws between reduction gear flange and stool flange
4-Remove the reduction gear

C) REPLACEMENT OF THE SEAL

1-Loosen the fixing bolts of the mechanical seal (8)
2-Carefully loosen the screw (3) of the guide shaft (18), lowering the shaft slowly until the rotating part of the shut off (13) rests on the stationary part (14)
3-Remove the screws from the flanged joint (16+17)
4-Lift the guide shaft (9) inside the cavity of the reduction gear and insert the shaft stops (19) into the spider, so that the shaft is kept lifted
5-Remove the removable flange (17) loosening and removing screw (3), washer (4), and key.
6-Wrap the part of the shaft with the hollow key with a thin ribbon and spread with lubricant
7-Remove the mechanical seal (8) through the spider openings

ATTENTION: the seal surface of the fixed and rotating seat are lapped with finish. Lubricate with silicon grease and slide the mechanical seal on the shaft paying attention not to damage it.

8-If the seal (8) is too heavy, place some rails on the stool to make the seal slide outside the stool.
9-Replace / Maintain the cartridge (8),
10-Proceed with the opposite phases for the assembly

10

Vertical mixer with cartridge seal, coaxial reduction gear, spacer joint within the stool to remove the seal without touching the reduction gear, AVS series

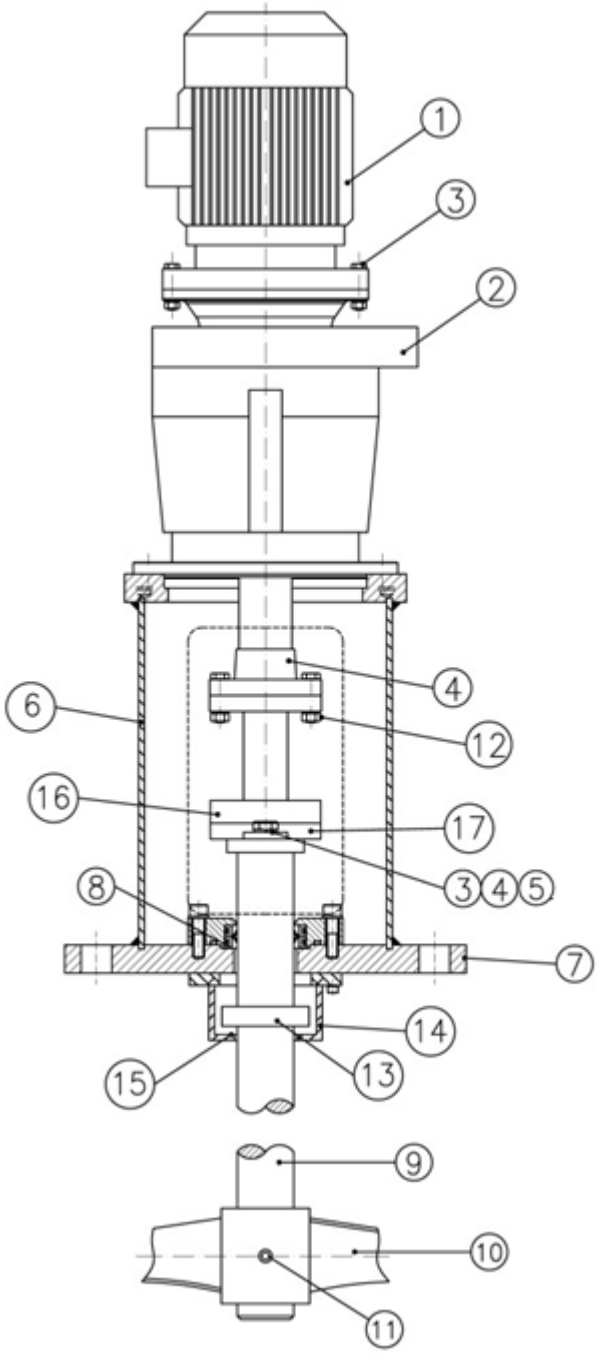

Pos	Description
1	Electric motor
2	Reduction gear
3	Fixing screw
4	Fixing washer
5	Anti-rotational key
6	Stool
7	Connection flange
8	Cartridge seal
9	Shaft
10	Impeller blades
11	Impeller hub
12	Flanged joint fixing bolts
13	Shut off rotating part
14	Shut off stationary part
15	O ring
16	Flanged spacer joint
17	Dismantling flange

For larger mixers, it is better to replace the mechanical seal without intervening on the geared motor unit.
This is why a higher spider is made to receive a spacer joint and leave the space to remove the seal through the side windows.
The mechanical seal is mounted together with the flange and stool, which are separated by the driving set.
The shut off prevents pressure loss from the tank during the maintenance phases.

A) ASSEMBLY

1-Insert the shaft (9) and the impeller (10) in the tank
2- Secure the flange (7) of seal unit to the tank flange having the same dimensions.
3-Isert the fixed part (14) on the shaft and the rotating part (13) on the shut off. Fasten the latter making sure that the dowels are aligned with the marks made on the shaft.
4- The shaft (9) has a threaded hole on the head, to which an eyebolt is secured in order to use the lifting chain. Wrap the part of the shaft with the hollow key with a thin ribbon and spread with lubricant
Lift the shaft and carefully make it pass through the flange (7) and seal (8).

ATTENTION: the seal surface of the fixed and rotating seat are lapped with finish. Lubricate with silicon grease and slide the mechanical seal on the shaft paying attention not to damage it.

5- Once the shut off has reached the bottom of the flange, secure it to the flange and lower the shaft with the rotating part of the shut off (13) on the fixed part (14).
6-Remove the eyebolt
7-If not already on the hollow of the shaft, insert the anti-rotational key (12) and removable flange (17). Then insert the upper locking ring (4) and tighten the screw head (3).
8-Mount the driving set (1+2), lowering the spacer joint (16), already mounted on the reduction gear (2) into the stool (6) and tightening the bolts between reduction gear flange and stool flange.
9-Insert the bolts (12) in the flanged joint (16 and 17) and, by tightening them, lift the shaft by a few millilitres to separate the two components (13 and 14) of the shut off and complete the assembling.

B) REPLACEMENT OF THE REDUCTION GEAR

1-Dismantle the motor from the reduction gear, if needed
2-Slowly remove the screws (12) of the flanged joint, making the rotating part of the shut off (13) rest on the stationary part (14)
3-Remove the screws between reduction gear flange and stool flange
4-Remove the reduction gear

C) REPLACEMENT OF THE SEAL

1-Loosen the fixing bolts of the mechanical seal (8)
2-Carefully loosen the screw (12) of the flanged joint (16+17), lowering the shaft slowly until the rotating part of the shut off (13) rests on the stationary part (14)
3-Remove the screws of the flanged joint, also in the upper connection, and remove the spacer joint (there is space because the centring mark of the joint has a lower value at half the distance between the fixed and rotating component of the shut off)
4-Remove the removable flange (17) loosening and removing screw (3), washer (4), and key.
5-Wrap the part of the shaft with the hollow key with a thin ribbon and spread with lubricant
6-Lift the mechanical seal (8) through the spider openings

ATTENTION: the seal surface of the fixed and rotating seat are lapped with finish. Lubricate with silicon grease and slide the mechanical seal on the shaft paying attention not to damage it.

7-If the seal (8) is too heavy, place some rails on the stool to make the seal slide outside the stool.
8-Replace / maintain the cartridge (8),
9-Proceed with the opposite phases for the assembly

11
Vertical mixer with siphon seal, coaxial reduction gear, AVS series

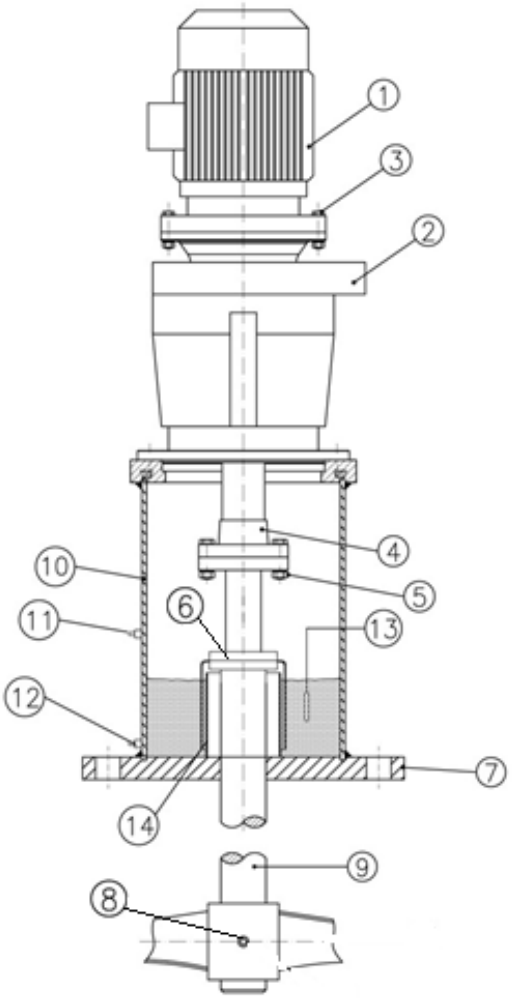

Pos	Description
1	Electric motor
2	Reduction gear
3	Fixing screw
4	Flanged joint
5	Fixing screw
6	Rotating part of the siphon
7	Tank connection flange
8	Impeller
9	Shaft
10	Flanged stool (supplied by the customer)
11	Barrier liquid inlet (supplied by the customer)
12	Barrier liquid outlet (supplied by the customer)
13	Level Meter (supplied by the customer)
14	Siphon stationary part (supplied by the customer)

For larger mixers, when the shafts are very long and pressure can be checked from a small head (< 0.05 barg = 50 cm of water), it is convenient to use a siphon seal, provided by the customer, except for the siphon rotating part (inverted cup, which must be secured to the mixer shaft).

A) ASSEMBLY

1-Insert the shaft (9) and the impeller (8) in the tank
2-The seal unit, provided by the customer, is already mounted on the tank roof
3- The shaft (9) has a threaded hole on the head, to which an eyebolt is secured in order to use the lifting chain. Lift the shaft and carefully make it pass through the stationary part of the siphon (14).
4- Once the shaft has reached an area of the roof that can be managed, fasten the rotating part of the siphon (6), making sure that the dowels are aligned with the marks made on the shaft, and the removable flange, complete with key, washer and head screw.
5- Gently lower the shaft until the rotating part of the siphon (6) rests on the stationary part and remove the eyebolt
6-Fasten the flange of the reduction gear to that of the stool.
9-Insert the bolts (5) in the flanged joint (4 and 17) and, by tightening them, lift the shaft by a few millilitres to separate the two components of the siphon and proceed assembling.

B) REPLACEMENT OF THE REDUCTION GEAR

1-Dismantle the motor from the reduction gear, if needed
2-Slowly remove the screws (5) of the flanged joint, making the rotating part of the siphon (6) rest on the fixed part, which is welded to the connection flange
3-Remove the screws between reduction gear flange and stool flange
4-Remove the reduction gear

6.3.7 Mixing unit

The shaft if secured to the driving set by following the rules set-out in the previous paragraph.

Shaft-impellers assembly follows the rules set out below:

1. For **uncoated** mixers, shaft/impeller assembly is effected by tightening the screws or dowels provided.
2. If the mixer is coated (or with impellers welded to the shaft), the shaft and the impeller(s) form a single component; therefore, as the physical separation of the components is not possible, it is necessary to insert the whole unit into the tank with extreme care to prevent damage to the coating.
3. Check the minimum opening through which the impeller, or its parts (if removable), can be inserted.
4. Depending on the type of impeller, respect the position direction of the propeller on the shaft, as shown in the mixer drawing.
5. Remove the film that protects against oxidation from the parts machined using the machine tool.
6. It is good practice to make sure that dowels and nuts tightened during the assembly do not come loose during operation, using mechanical or chemical material that is compatible with the process and maintenance.

Below we describe the possible configurations:

SERIAL NUMBER	IMPELLER TYPE	HUB BLADE FIXING	SHAFT HUB FIXING	CHARACTERISTIC
1	Single piece, welded to the shaft	No	No	Sanitary/coated. Attention to the possibility to insert the shaft/impeller unit in the tank
2	Single piece Passing hub	No	With dowels in radial position	Simple
3	Single piece Threaded blind hub	No	Tightened with flat gasket	Sanitary
4	Blades bolted to the hub	Bolts	With dowels in radial position Optional key	For greater diameters, when the manhole cannot be sufficient for insertion of the impeller in single piece
5	Split disc radial	Bolts	With dowels in radial position Optional key	For greater diameters, when the manhole cannot be sufficient for insertion of the impeller in single piece
6	Single piece Threaded blind hub	No	To be tightened to the shaft with bolts Optional key	For tube shafts or impellers with large diameter
7	Special	Special	Special	Assembly instructions provided during the job order phase

IMPELLER SECURED TO THE SHAFT USING DOWELS

In the case of impellers attached to the shaft using dowels, it is good practice to mark the shaft at the dowels after positioning the impellers, taking care not to drill the shaft completely when it is expected in the tube.

IMPELLERS WITH BOLTED BLADES

The impellers are shipped disassembled to facilitate transport and installation of the mixer.
To secure the blades to the hub, rest the three blades under the hub fins and insert the bolts with washers and nuts.
The blades are placed under the hub in the normal configuration with pumping downwards; on the contrary, they must be placed above the hub if pumping is upwards.

Important: before tightening the bolts, make sure that the ends of the blades are well supported on the hub fins. Furthermore, after tightening the bolts, make sure the blades have not moved along the hub fins.

It is essential that the torque of the bolts is suitable. It is equally important to keep the bolts tightened, given that the impellers are often subject to intense and variable stress, due to the reaction to the fluid forces.

To secure the hub to the shaft, cover the shaft with lubricant to facilitate moving the impeller, and then slide it upwards until reaching the holes obtained on the shaft and tighten the dowels.

The GREC three-blade hubs can be mounted in one direction or the other and have been designed to operate with clockwise shaft rotation (seen from the motor).

The concave part of the blades must be in the thrust direction (normally downwards), considering the clockwise rotation direction of the shaft seen from the top.
The outriggers, installed only on the bottom impellers, must face downwards.
The stabilising fins at the impeller ends (Pag T1) must face the opposite direction of the flow, therefore upwards.

IMPELLERS WITH THREE PIECES TO TIGHTEN TO THE SHAFT

With the three-piece impeller, first assemble the shaft in the correct vertical position, coupled to the geared motor, then assemble the three parts that make up the impeller on the ground.Then lift up the slung impeller and insert it into the shaft from below until reaching the position shown on the drawing and secure the bolts using a torque wrench with suitable calibration for the diameter of the bolts themselves and their material.
When the bolts are being tightened, check the clearance between the fins, so that the bolts are kept tight.

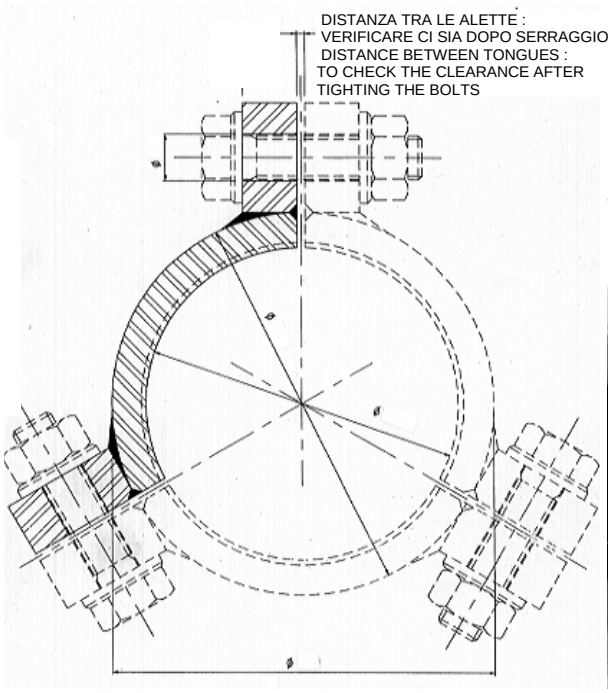

POS.	DESCRIZIONE
167	DADO T.E. (9)
166	GROWER (9)
165	VITE A TESTA ESAGONALE (9)
163	VITE (1÷3 DIPENDE DAL DIAMETRO)
161	MOZZO
160	PALE (3)
117	ALBERO AGITATORE

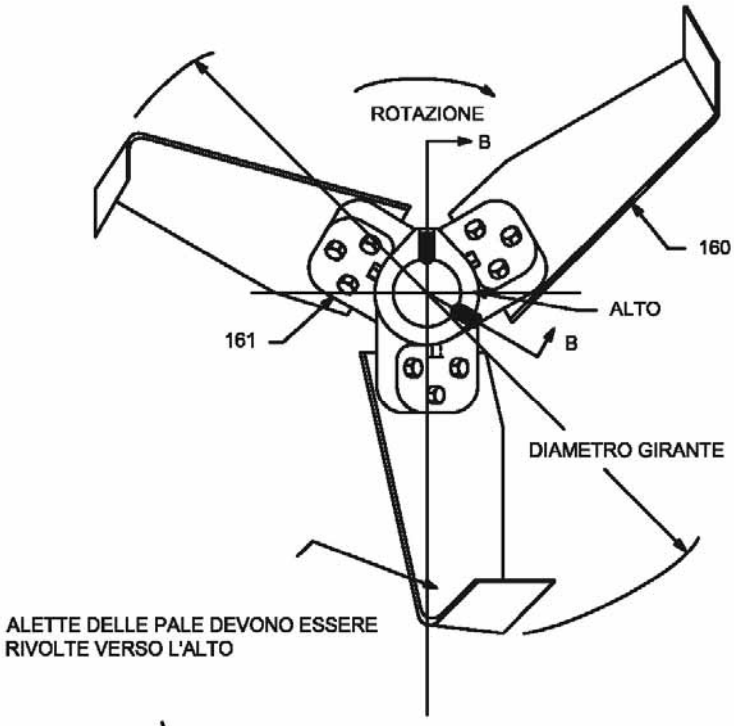

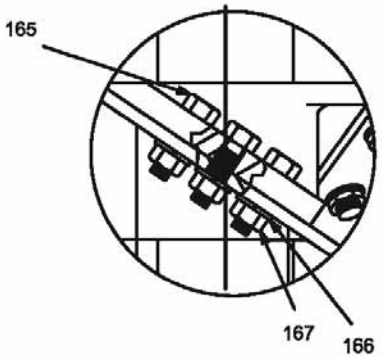

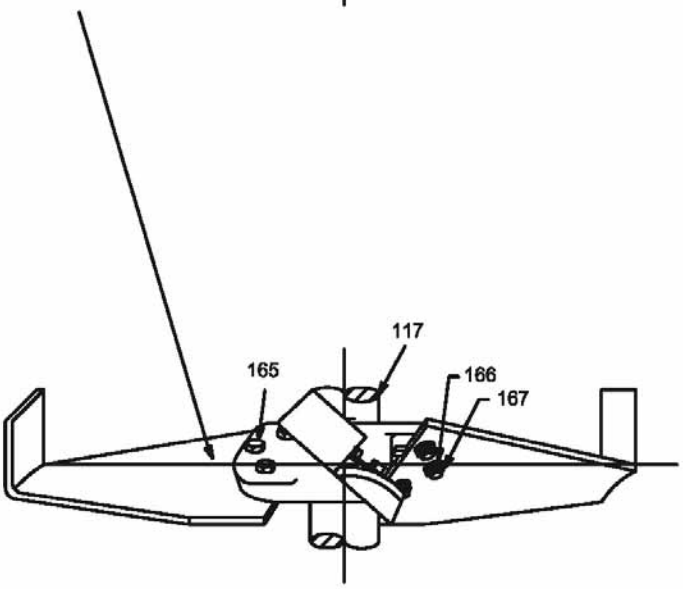

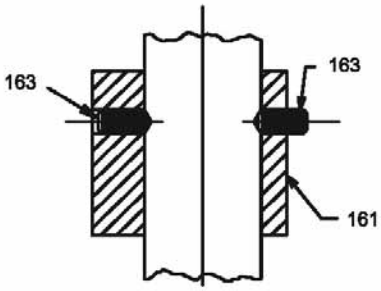

SEZIONE B-B

Ricavato da .....

Oggetto ASSIEME GIRANTE A FLUSSO ASSIALE MOZZO IN UN PEZZO SOLO PALE IMBULLONATE			Disegno n°	Rev.
			Q.TA' N° 1	ARTICOLO N°
GREC S.r.l. Via Copernico, 3 20062 Bisnate (MI) ITALY Tel.: +39 02 36645050		MATERIALE	DISEGNATORE MM	DATA 10/10/2011
	SCALA NO	FORMATO FOGLIO A3	COMMESSA N°	CLIENTE

A termini di legge questo disegno non può essere riprodotto o mostrato a terzi senza la autorizzazione scritta

6.3.8 Fixing torque

Inadequately or improperly tightened bolts may become loose due to vibration or stress due to the fluid being mixed. This can shorten the life of the equipment or cause damage or failure.

The recommended fixing torques for the nuts and bolts of the mixers and their supports are listed in the table below. These values should be considered only as a guide and may require changes in special cases.

However, except where otherwise stated, always tighten the nuts and bolts of the mixers and their supports to the values shown in the table.

	stainless steel	Steel 8.8
Bolt - Pitch	Fixing Torque (Nm)	Fixing Torque (Nm)
M10	30	50
M12	50	80
M14	85	130
M16	120	200
M18	180	280
M20	240	400
M22	320	600
M24	400	700
M27	650	1000
M30	800	1400

The above mentioned values are for standard bolts and lubricated threads; for non-lubricated threads, multiply these values by 1.3.
All bolts should be coated with oil, grease or a protective substance whenever possible.
When couplings with locking elements are used, add 15% to the indicated values.

All the bolts should be inspected and tightened again after two weeks of work under load and then at every planned stop.

7- START UP

7.1. - preliminary checks

- Make sure the shaft turns manually from the motor fan.
- Make sure there are no obstacles to the movement of the shaft and impeller.
- Check the distance between the impellers and between them and the bottom and the walls

7.2 - Electrical connections

Before starting to work on the mixer, make sure that the electrical power supply is disconnected and can not be accidentally reconnected.
First connect the earthing cable (yellow/green).
It is recommended to install a high sensitivity (30 mA) differential switch, as an auxiliary protection against lethal electric shocks, in case earthing connection is not correctly working.
Make sure the power supply voltage corresponds to the rated one

The electrical connection must always be carried out by qualified personnel, in compliance with the applicable EEI, EN 60204 and possible local regulations.
Always refer to the data on the voltage and frequency plate, in order to ensure a correct connection with the power supply network. If not specified, tolerance can be of ±5% on the voltage and ±1% on the frequency values indicated in the plate. The connection diagrams are normally provided with the motor or are printed in the terminal box. Should they be missing, refer to those provided in the manual.

The identification plate shows the following data:

- power supply voltage
- three-phase winding, connection (Y) or (Δ)
- current consumption under normal load

The motors are calibrated for voltage with 1:√3 ratio; e.g. 380/660 V Δ/Y, and can be started in the following ways:

- direct insertion in the network with line voltage equal to the lower voltage value indicated on the identification plate ("Δ" triangle connection of the winding).
- direct insertion in the network with line voltage equal to the higher voltage value indicated on the identification plate ("Y" star connection of the winding).
- Indirect insertion in the network by means of star-triangle switch (after having removed the connectors from the terminal box), with line voltage equal to the lower voltage value indicated in the identification plate. Make sure that, in the presence of star/triangle start up, the switch from star to triangle is performed only when the start up current corresponds to the star value. This is important to prevent risk of overloads not allowed.

Connect the motor to the mains via a multi-polar switch or other device that ensures multiple disconnection (breaking all the electric wires) from the mains, with a contact gap of at least 3 mm.
Remove the cover of the motor terminal box.
Make connections as shown in the back of the terminal box cover or as indicated in the following page. – Use certified cable glands for the area in which it the mixer is installed.

The electric power supply to the motor must be fitted with a thermal-magnetic circuit breaker or magnetic starter with overload and minimum voltage protections, a thermal relay and fuses installed upstream by the installer. The overload relay must be set to the rated motor current.

Connection of the terminal box to the power supply

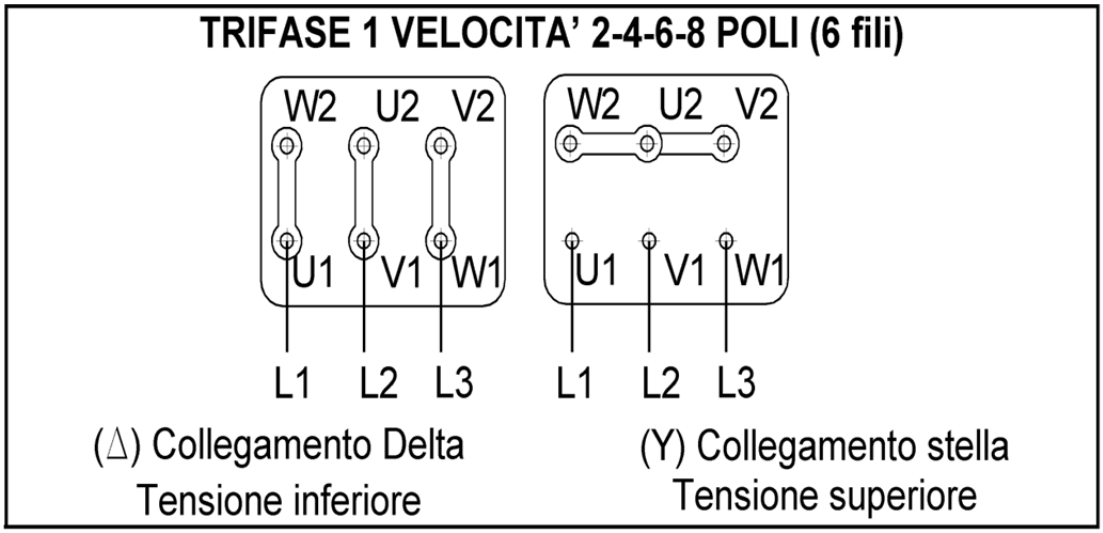

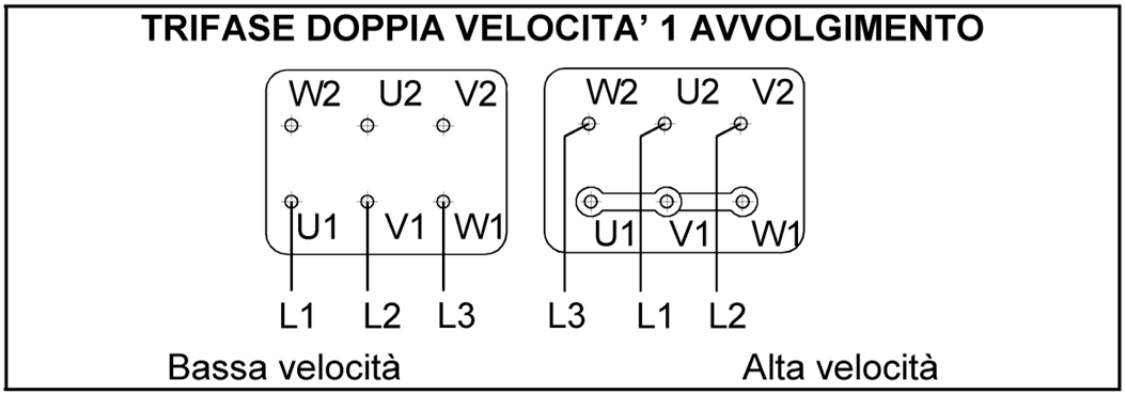

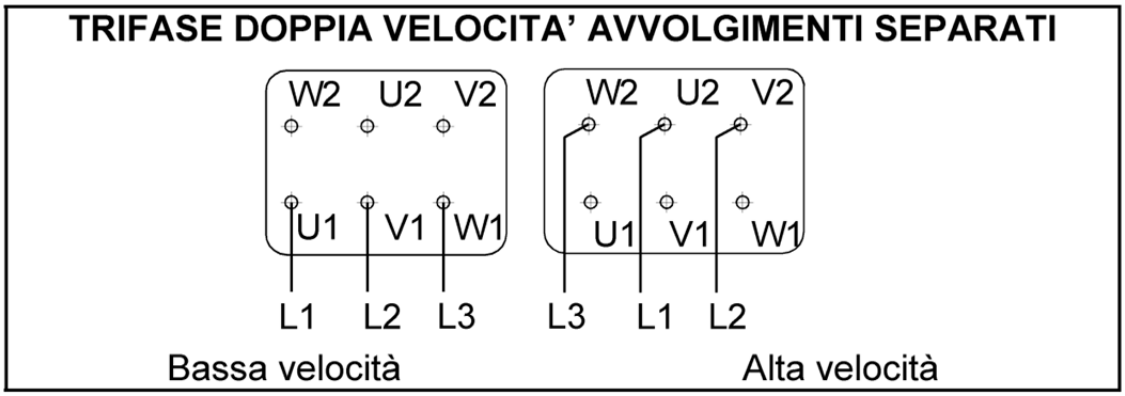

If the motor is fitted with a thermal protector, connect the protector's cables to an auxiliary contact of the contactor on the power supply line

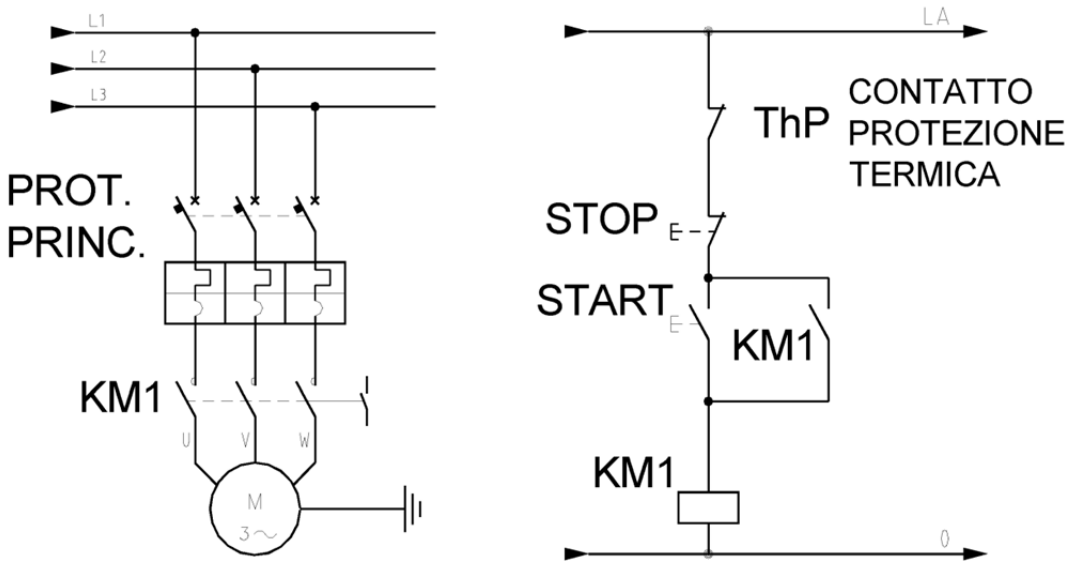

7.3 - Checking the direction of rotation

The direction of rotation can also be checked before filling up the tank.
In the presence of a seal dipped in the liquid (AL series mixers) it is only possible to activate the motor for brief moments.

The mixer should not be started (if not specified in the sales documents) if the impeller is immersed in settled solids.
The direction of rotation is usually clockwise if seen from the motor towards the impeller. However, the correct direction of rotation is indicated on the mixer by an arrow.
If necessary, reverse the direction of rotation exchanging the position of any two wires of the power supply (this is true only for three-phase electric motors. Refer to the relevant manuals for the other motor types)

- 7.4 Operation Checks

Before starting the mixer, it is also necessary to perform the following checks:

- Check that all screws and bolts are tightened.
- Vent the air in the area of the mechanical seal, if necessary.
- Check that all moving parts are inaccessible and all their guards are properly installed.
- For mixers with double mechanical seal: check the connections of tubes and accessories. Start up and, if necessary, check correct the flow of the flushing or cooling system (read the relative manual).

For vertical mixers, it is necessary to carry out an initial empty run in order to verify current consumption, surface temperature (after 30 minutes of operation) and rotation speed), the possible
Then values can be compared with those resulting from the first water test.

The functional test must be carried out setting the actual operating conditions, including any tank pressurisation

Immediately after the first start up of the mixer, check the following:
-Check that the mixer does not produce “strange” noises. If it does, stop it immediately and discover and prevent the causes before restarting it.
-Check that the mixer does not produce evident vibrations or oscillations. If it does, stop it immediately and discover and prevent the causes before restarting it.

-Check that there are no leaks of oil, grease, water or other fluids. If there are, stop the mixer immediately and discover and prevent the causes before restarting it.
-Measure the voltage at the motor terminals and check that it is within the limits shown on the data plate.
-Measure the current consumption on each phase and make sure it is less than the rated value shown on the motor data plate

. **The motor must never be overloaded.**

Immediately stop the motor in case of:

- smoke and flames from the motor or the electrical system,
- motor overheating,
- sharp decrease in the motor speed,
- damaged fan,
- damaged starting device,
- other reasons, when a further operation of the motor or of the starting device causes damages to the environment.

In case of installation of motors with B14 flange, make sure the length of fixing bolts is appropriate for the hole diameter and depth: screws which are too long may cause damage to the motor winding.

8 - CONTROL AND PREVENTIVE MAINTENANCE PLAN

Before performing any work on the mixer, ensure that:

- **The motor power supply is completely disconnected and cannot be restored accidentally.**
- **The tank where the mixer is installed is not pressurised or under vacuum.**
- **The surfaces of the mixer and/or the tank are not hot or iced.**
- **Any vapours or odours that may escape from the tanks are not dangerous to humans or the environment.**

COMPONENT	CONTROL	LUBRICATION	REPLACEMENT
Motor			
Surface cleaning	Eliminate dust every 1,000 hours		
Eliminate condensation	Periodically		
Oil seal	1,000 hours /2 months		When necessary
Rotation	Start up		
Vibrations	Start up		
Temperature	Regularly		
Gearbox			
Surface cleaning	Eliminate dust every 1,000 hours		
Eliminate condensation	Periodically		
Oil check	1,000 hours /2 months	When necessary	10,000 hours
Oil seal	1,000 hours /2 months		When necessary
Temperature	3 hours before starting up + regularly (never 70°C more than ambient temperature)		
Rotation	Start up		
Bearing support spider			
Surface cleaning	Eliminate dust every 1,000 hours		
Bearing replacement	7000 hours		7000 hours
Seal			
Stuffing box	Periodically	Normal leakage 2-3 drops/min	
Temperature	Regularly		
Temperature sensor visual check	1,000 hours / 2 months		
Visual check of the seal lubricant control system	1,000 hours / 2 months		
Seal emission check (if necessary)	100 hours /1 week		
Mixing unit			
Bolt torque	100 hours after staring up + regularly		

Use this table as a guide, but always refer to the manufacturers' manuals of the individual components

8.1 Lubrication

MOTOR BEARINGS

Pre-lubricated, double coating bearings (type 2Z) are filled with a quantity of grease which is sufficient for the whole operating duration. Once the motor's warranty time has expired, it is advisable to replace the bearings. Motors where the lubricators are fitted on the bearing guards should be periodically lubricated. This table indicates the lubrication intervals, type and quantity of grease needed:

Mechanical size	Quantity of grease for re-lubrication [g]	Lubrication intervals [h]	
		1,500 revs/min.	3,000 revs/min.
90	4	2500	1500
100	5	2500	1500
112	7	2500	1500
132	10	1500	1000
160	12	1500	1000
180	17	1500	1000

GEARBOXES

Gearboxes are lubricated with Poli-alchil-glicole (PAG)-based synthetic oil, with EP additives, ISO320, for instance SHELL OMALA S4WE320 or equivalent
They allow an excellent performance of the gearbox with ambient temperatures from -20° to 90°C.

Be careful to use always the same type of oil, since it is not compatible with neither mineral, nor polyolefin-based synthetic oils.

Oil can be replaced with a lower viscosity one (ISO VG150) only for operation at temperatures under -30°C
Equivalent lubricants can be:
AGIP Blasia S320
ESSO Glicolube 320
Total Carter SY 320
BP Enersyn SG-XP 320
The replacement frequency depends on the actual temperature oil operates at. Higher frequency is recommended for epicycloidal gearboxs, AVS5÷11 and AVSh5÷9 models, where quantities are little and there is a cask

T oil	Operating frequency (hours)	Maximum calendar time
< 65°C	20,000	4 years
< 80°C	15,000	3 years
>90°C	9,000	2 years
Running-in	No replacement	

A more frequent oil change can be necessary also in case of difficult operating conditions, such as:
a. wide and fast fluctuations in ambient temperature
b. harmful vapours, chemical fumes, dusty or particularly wet atmospheres.

The gearbox is always delivered full of oil; the indicative quantities for oil change are listed in the table.
All the gearboxes whose oil is to be changed are equipped with filling and emptying caps and with visual inspection window. When the mixer has not run for 30 minutes and oil is cold, the oil level should be at the midpoint of the inspection window.

For the shipping, the filling cap and its breather are never fitted on the machine in order to avoid oil leakage. The blind cap must be replaced before the machine is started for the first time.

Model	model	Oil quantity		Gearbox	model	Oil quantity
AVF1	40	for life		AVS1	H61 (V1)	for life
AVF2 /ALF2	50	for life		AVS2	RCV352 (V1)	for life
AVF3 /ALF3	50	for life		AVS3	RCV452 (V1)	2.9
AVF4 /ALF4	75	for life		AVS4	RCV552 (V1)	4.5
AVF5	90 (B7)	0.8		AVS5	EX502 (M3)	3.8
ALF5	90 (B8)	0.8		AVS6	EX802 (M3)	5.7
AVF6	110 (B7)	1.5		AVS7	EX802 (M3)	5.7
ALF6	110 (B8)	2.0		AVS8	EX1002 (M3)	6.4
AVL1	ZF80B (V1)	1.5		AVS9	EX1502 (M3)	6.9
AVL2	ZF100B (V1)	2.6		AVS10	EX2502 (M3)	9.8
AVL3	ZF125B (V1)	4.8		AVS11	EX3003 (M3)	11.3
AVL4	PMF125 (M3)	8,7		AVSm5	ZR88 (V1)	6.8
AVL5	ZF160B (V1)	9.2		AVSm6	ZR108 (V1)	13.8
AVL6	FZ128 (H05)	22.1		AVSm7	ZR128 (V1)	18.5
AVL7	ZF180B (V1)	14		AVSm8	ZR148 (V1)	26.5
AVL8	ZF200B (V1)	19		AVSh5	303VK	2.9
AVC1	OMF80 (M5)	1.3		AVSh6	305VK	3.4
AVC2	OMF90 (M5)	3		AVSh7	306VK	4.6
AVC3	OMF112 (M5)	5.5		AVSh8	307VK	6.5
AVC4	OMF125 (M5)	4.5		AVSh9	309VK	7.0
AVC5	OMF140 (M5)	13.3		ALC1	OMF100 (M3)	2.5
AVC6	OMF150 (M5)	16.5		ALC2	OMF125 (M3)	4.4
AVC7	OMF170 (M5)	24.5		ALC3	RXV1-802 (M1)	2.5
AVC8	OMF190 (M5)	33		ALC4	RXV1-804 (M1)	3.5
				ALC5	RXV1-806 (M1)	4.9
				ALC6	RXV1-808 (M1)	6.9

Always check on the plate that the installed gearbox is that indicated in the previous page, otherwise request oil to GREC Srl

9 - CORRECTIVE MAINTENANCE

The machine components subject to wear are the seals and the bearings.
There are designed to last long in time if they are correctly maintained.
However, it is not possible to set a precise life duration for these components, since it depends on actual working hours, temperature and pressure, loads applied, corrosiveness of the environment and rotation speed.
A good preventive maintenance avoids the need for corrective maintenance, but if it becomes necessary, follow the safety procedures

- Switch off the mixer and make sure it cannot turn on for any reason
- Use a signboard to signal the ongoing maintenance
- Mark the current position with a felt-tip pen to be able to restore it when assembling (electrical and mechanical connections)
- Use a mechanical lifting device
- Dismantle the reduction gear and fit a support device to the mixer shaft
- Lift the unit until the shaft is accessible and can be dismantled
- If possible, remove the motor and empty the gearbox from oil
- If possible, remove the mechanical seal.

Follow the instructions given in the manufacturer's manual for the maintenance of mechanical seal, motor and gearbox.
When in doubt, contact GREC S.r.l.

In case of operation in a potentially explosive area, always take the machine needing maintenance to a safe area and, before opening the tank, make sure that the intervention cannot alter the safety conditions of the environment.

It is expedient and advisable to replace bearings and oil seals only. In case other parts are damaged, e.g. shafts or gears, it may be advisable to purchase a new component.

Bearings and oil seals fitted on GREC mixers are listed below

Always check on the plate that the installed gearbox is that indicated in the previous page, otherwise request the lest of parts subject to wear to GREC Srl

9.1

Electric motor

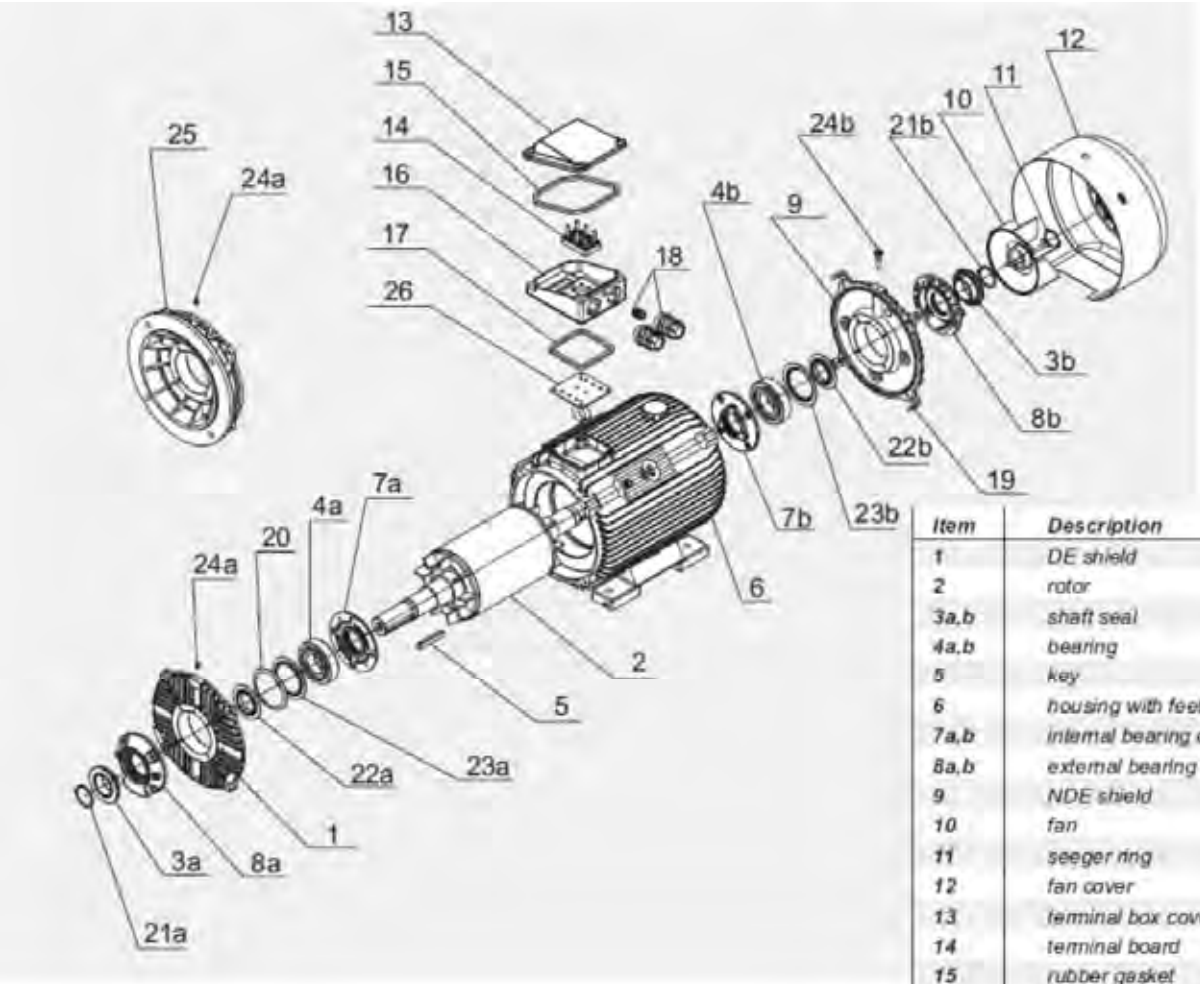

Item	Description
1	DE shield
2	rotor
3a,b	shaft seal
4a,b	bearing
5	key
6	housing with feet
7a,b	internal bearing cap
8a,b	external bearing cap
9	NDE shield
10	fan
11	seeger ring
12	fan cover
13	terminal box cover
14	terminal board
15	rubber gasket
16	terminal box housing
17	rubber gasket
18	cable glands
19	fan cover support
20	spring washer
21a,b	seeger ring
22a,b	grease shield
23a,b	bearing internal ring
24a,b	grease nipple
25	flange B5
26	rubber gasket

Motor	Motor power			Bearings (front and rear)	Sealing ring (DIN 3760)
	4p	6p	8p		
71	0.25 - 0.37	0.18 – 0.25	0.09 – 0.12	6203 2Z	15x25x5A
80	0.55 - 0.75	0.37 – 0.55	0.18 – 0.25	6204 2Z	20x30x5A
90	1.1 - 1.5	0.75 – 1.1	0.37 – 0.55	6205 2Z	25x37x5A
100	2.2 - 3	1.5	0.75 – 1.1	6206 2Z	30x50x7A
112	4	2.2	1.5	6306 2Z	30x50x7A
132	5.5 – 7.5 – 9.2	3 – 4 – 5.5	2.2 – 3	6308 2Z	40x72x7A
160	11 - 15	7.5 – 11	4 – 5.5 – 7.5	6309 2Z	45x72x8A
180	18.5 - 22	15	11	6310 2Z	50x80x10A

9.2

Mixer with bearing box, AV and AL series

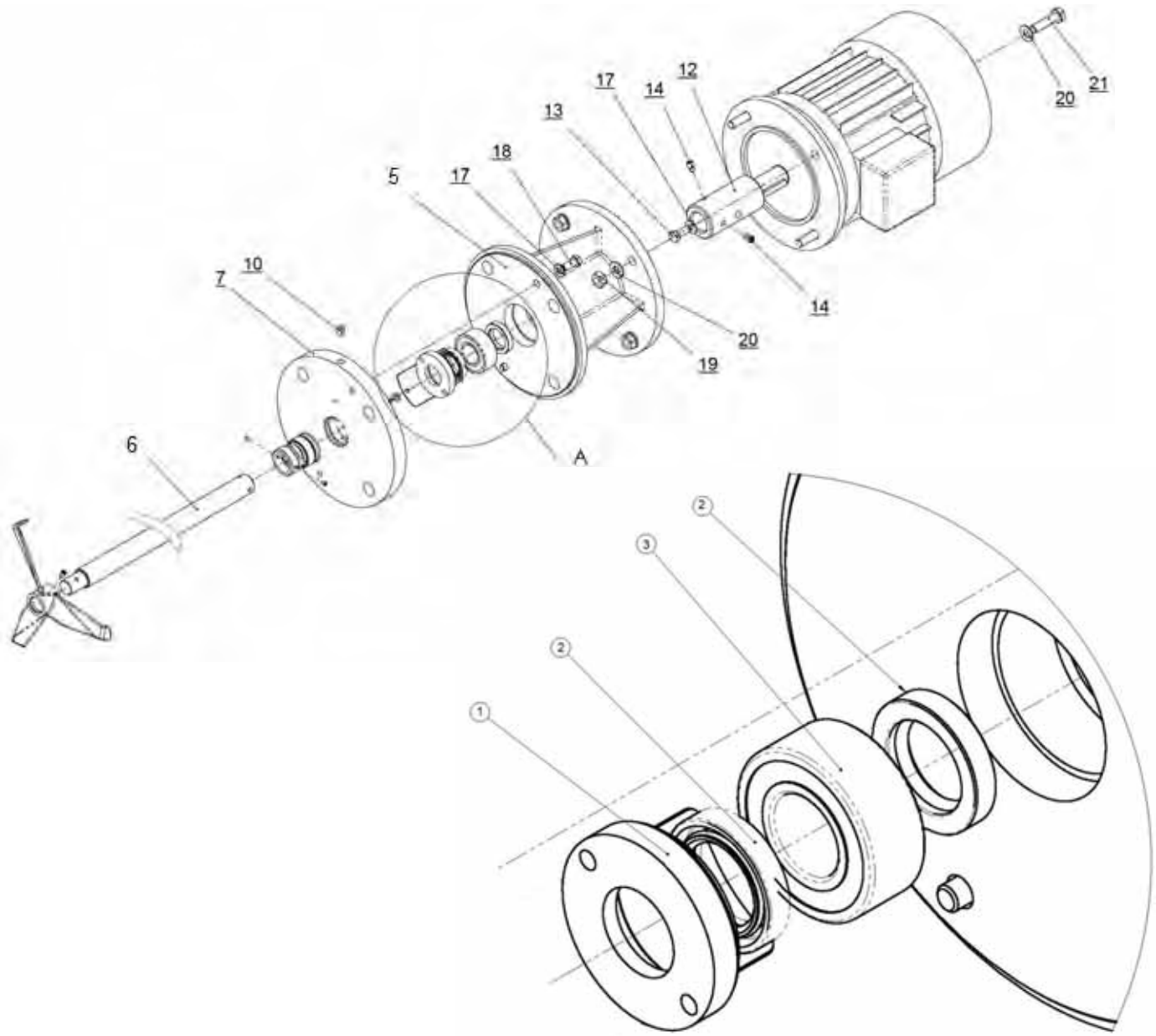

Components subject to wear		Shaft diameter								
Pos	Description	Q.ty	18mm	25mm	30mm	35mm	40mm	45mm	60mm	65mm
1	ring nut	1		BC25	BC30	BC35	BC40	BC45	BC60	BC65
2	radial seal	2		25-40-7	30-45-8	35-55-10	40-60-10	45-65-10	60-85-10	65-90-10
3	Bearing	1		3205B-2RS	3206B-2RS	3207B-2RS	3208B-2RS	3209B-2RS	3212B-2RS	3213-2RS
4a	lip seal (AV)	1		25-40-7	30-45-8	35-55-10	40-60-10	45-65-10	60-85-10	65-90-10
4b	SiC/graph. seal (AL)	1	001727	000096	000097	000098	000099			
4c	SS/graph. seal (AL)	1		104684	104685	104686	104687	104688		

9.3

Side mixer, ALC series

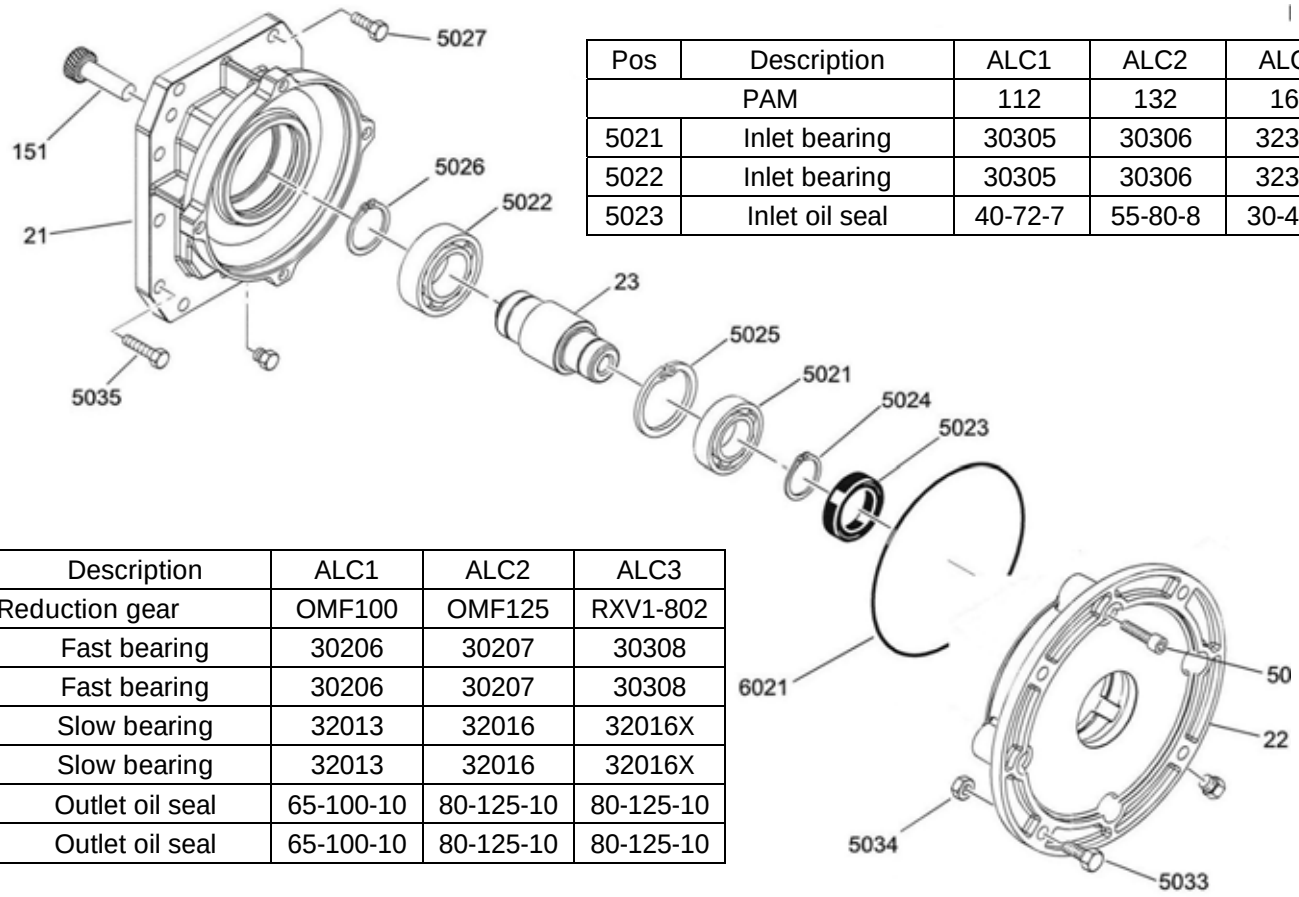

Pos	Description	ALC1	ALC2	ALC3
PAM		112	132	160
5021	Inlet bearing	30305	30306	32307
5022	Inlet bearing	30305	30306	32307
5023	Inlet oil seal	40-72-7	55-80-8	30-47-7

Pos	Description	ALC1	ALC2	ALC3
Reduction gear		OMF100	OMF125	RXV1-802
5320	Fast bearing	30206	30207	30308
5321	Fast bearing	30206	30207	30308
5304	Slow bearing	32013	32016	32016X
5304	Slow bearing	32013	32016	32016X
5851	Outlet oil seal	65-100-10	80-125-10	80-125-10
5851	Outlet oil seal	65-100-10	80-125-10	80-125-10

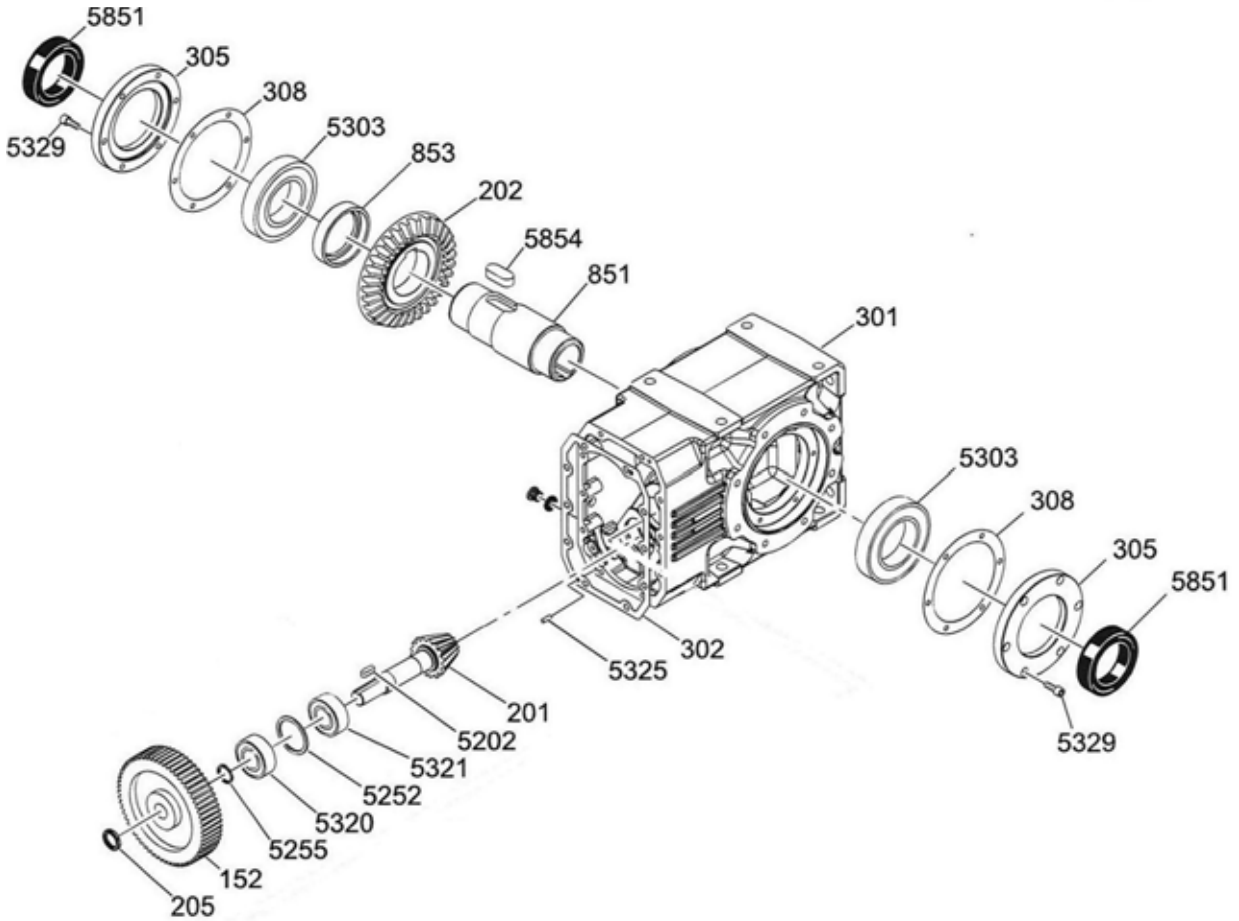

9.4

Mixers with worm screw reduction gear: AVF and ALF series

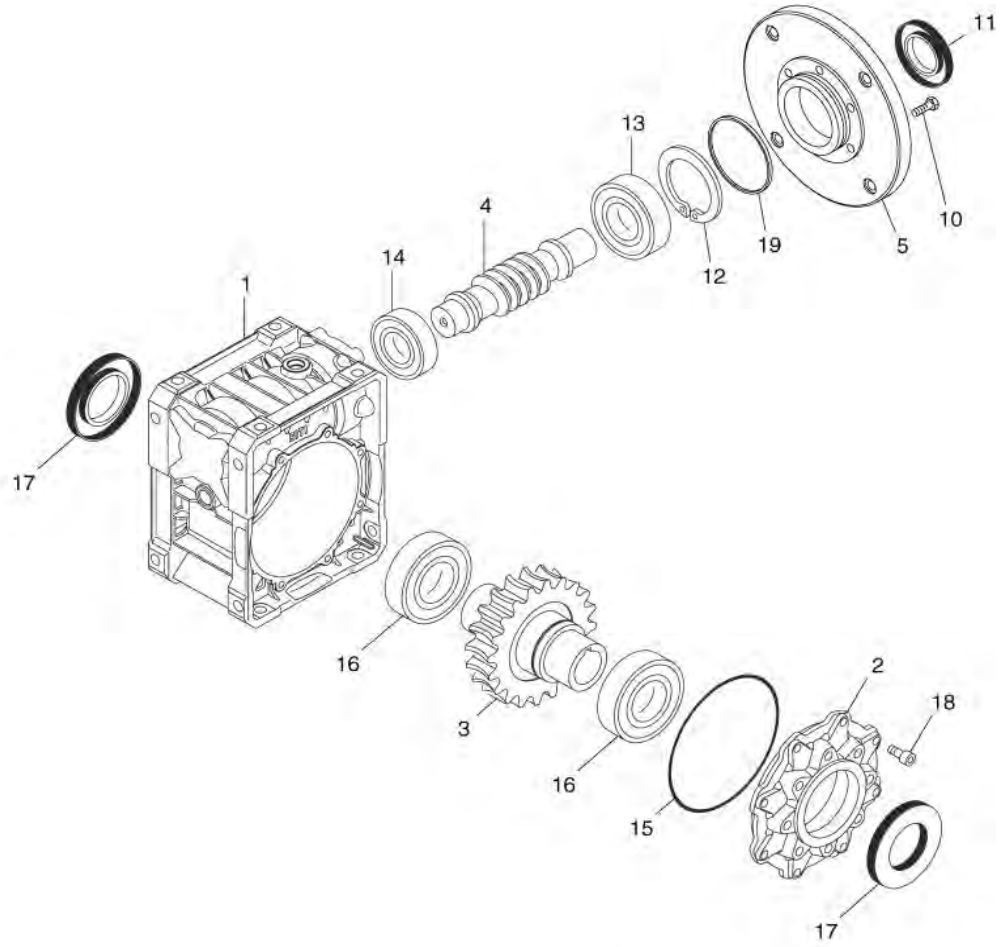

Component subject to wear			Code					
Pos	Q.ty	Description	AVF1	AVF2/ALF2	AVF3/ALF3	AVF4/ALF4	AVF5/ALF5	AVF6/ALF6
Reduction gear size			40	50		75	90	110
ATEX 2G			No	Yes		Yes	Yes	No
11	1	Fast shaft oil seal	25-47-7	25-47-7 (IEC71) 30-55-7 (IEC80) 25-35-7 (ATEX)		30-62-7 (IEC80) 35-62-7 (IEC90) 40-68-10 (IEC100)		40-80-10
						35-47-7 (ATEX)	40-56-8 (ATEX)	
13	1	Fast shaft bearing	6005	6005 (IEC71)	6006 (IEC80) 6203(ATEX)	32006 (IEC80) 32007 (IEC90) 32008 (IEC100)		30208
						32007(ATEX)	32008(ATEX)	
14	1	Fast shaft bearing	6201	6203		30205	32205B	32206B
						30304(ATEX)	30206(ATEX)	
17	2	slow shaft oil seal	30-47-7	40-62-8 40-56-8 (ATEX)		50-72-8		60-85-8
						45-60-7(ATEX)	50-65-8(ATEX)	
16	2	Slow shaft bearing	6006	6008	32008	32010	32010	32012
						32009(ATEX)		
	1	Lip seal for AVF	25-40-7	30-45-8	30-45-8	35-55-10	40-60-10	50-70-10
	1	Std mechanical seal for ALF		104684	104684	104685	104686	
	1	W mechanical seal for ALF		104690	104690	104691	104692	

9.5

Mixer with parallel axis reduction gear: AVL series

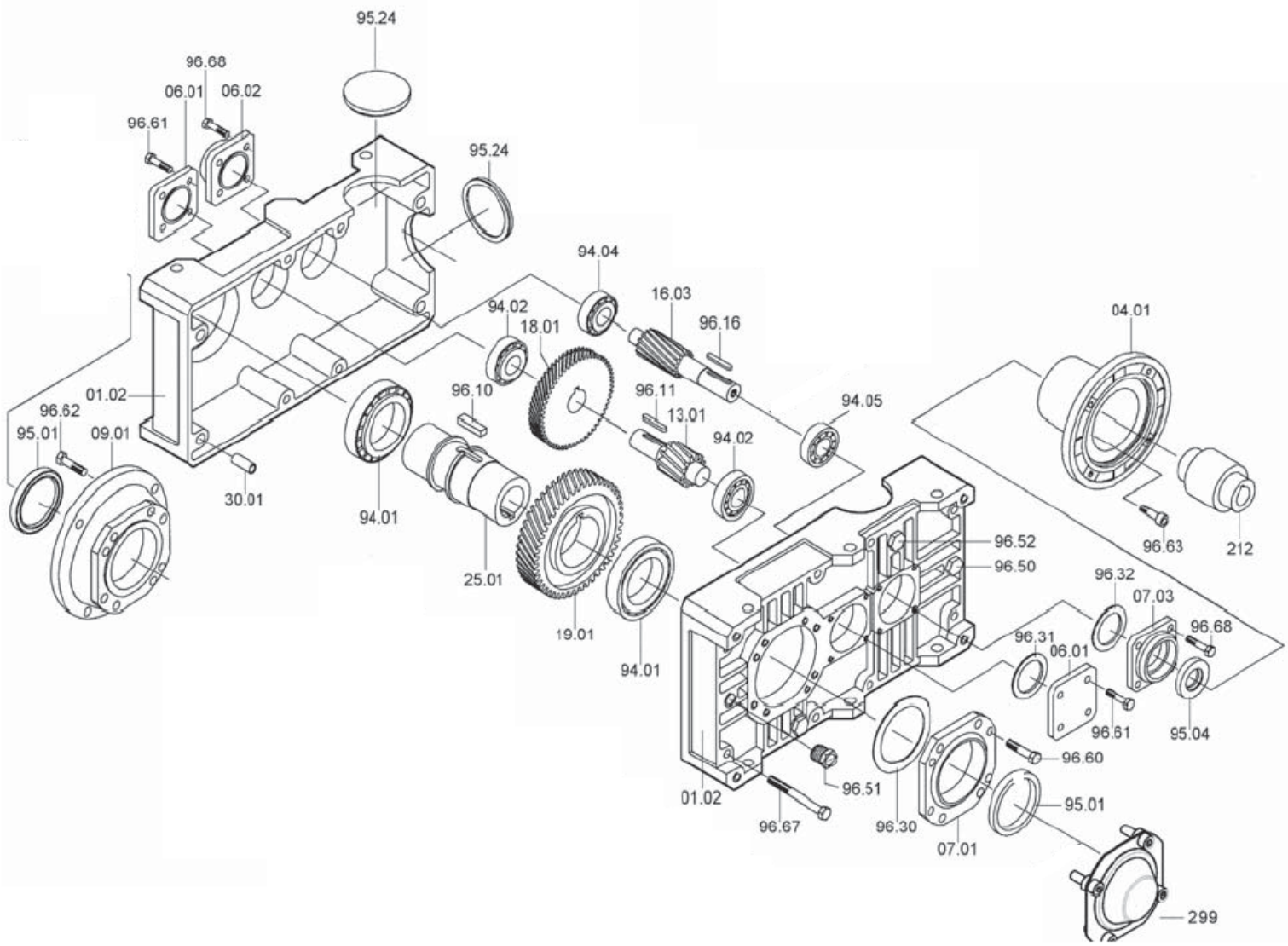

Component subject to wear			Code						
Pos	Q.ty	Description	AVL1	AVL2	AVL3	AVL4	AVL5	AVL7	AVL8
Reduction gear			ZF80B	ZF100B	ZF125B	S122	ZF160B	ZF180B	ZF200B
95.04	1	Fast shaft oil seal	20-40-7	25-47-7	30-52-7	50-65-8 (PAM112)	40-56-8	40-62-7	50-65-8
94.04 94.05	1 1	Fast shaft bearing	30302 32004	30204 32005	30305 30206	6310-2Z (PAM112)	32206 32008	30307 32208	32208 32010
94.02 94.02	1 1	Intermediate shaft bearing	30204 30204	30305 30305	32206 32206	30306 30307	32207 32207	31309 31309	31310 31310
95.01	1	slow shaft oil seal	50-65-8	60-80-10	75-95-10	85-130-10	95-125-12	120-160-15	130-160-12
94.01	2	Slow shaft bearing	32010	32012	32015	32017	32019	32024	32026
	1	Lip seal for AVL	40-60-10	50-70-10	60-85-10	70-110-10	80-110-10		

9.6
Mixer with bevel reduction gear: AVC series

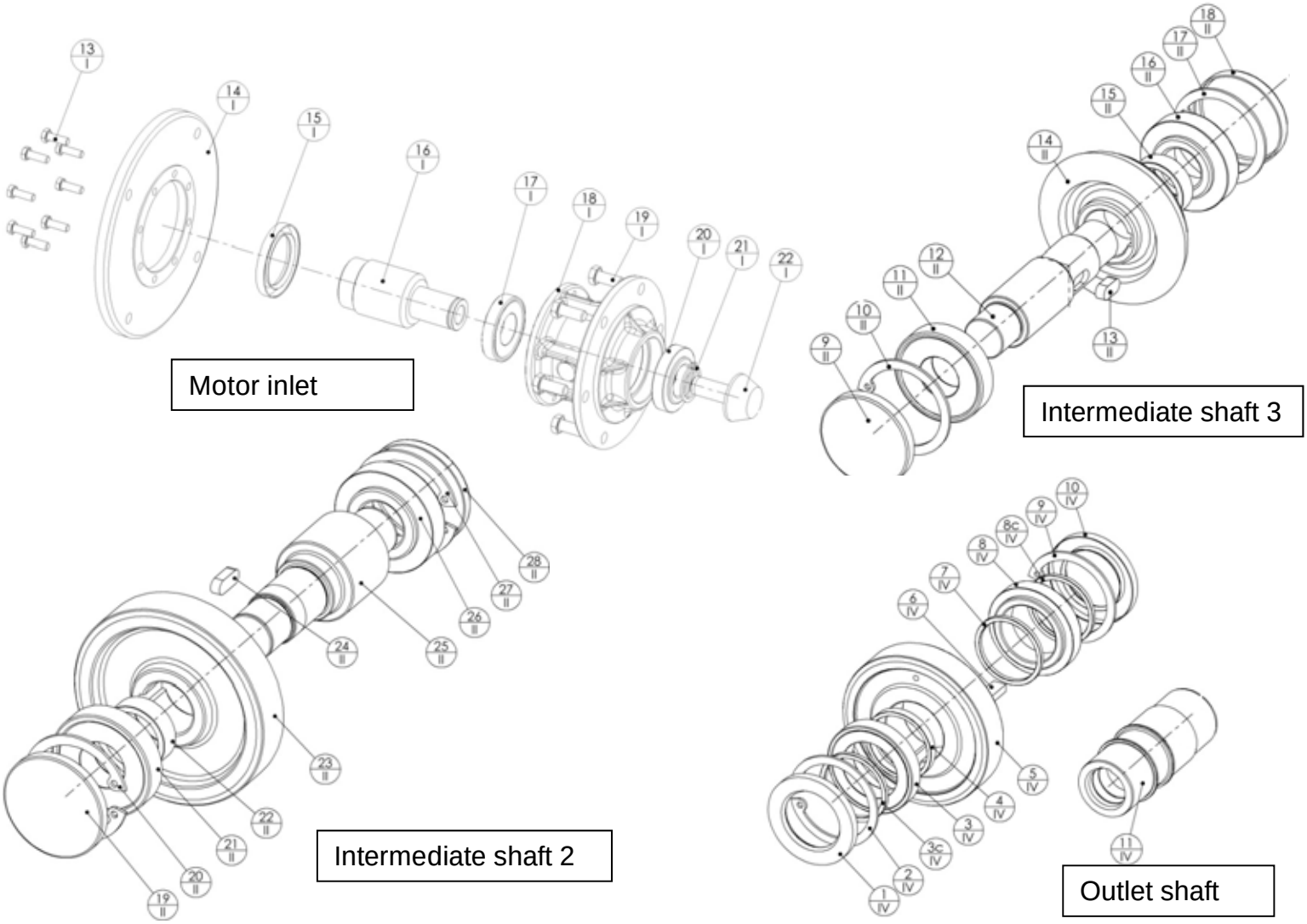

			Code							
Pos	SERIAL	Description	AVC1	AVC2	AVC3	AVC4	AVC5	AVC6	AVC7	AVC8
Reduction gear			OMF80	OMF90	OMF112	OMF125	OMF140	OMF150	OMF170	0MF190
N. of reduction stages / PAM			2 / 80	3 / 100	3/100(132)	2 / 132	2 / 160	3/132(160)	3 / 160	3 / 180
15/I	1	Fast shaft oil seal	40-56-8	45-78-8	45-78-8 (55-90-10)	55-80-8	80-110-10	55-90-10 (80-100-10)	80-110-10	80-110-10
17/I 20/I	1 1	Fast shaft bearing	32005 32005	6009-2RS HK3520	6009-2RS (6011-2RS) HK4020	30306 30306	32212 32212	32011 (30309) 32210 (30309)	31309 31309	31310 31310
21/II 26/II	1 1	Intermediate shaft bearing 2	30204 30204	30305 30305	30306 30306	30207 30207	30308 30308	30310 30310	30311 30311	30312 30312
11/II 16/II	1 1	Intermediate shaft bearing 3	-	32304 32304	32305 32305	-	-	30308 30308	30310 30310	32212 32212
1/IV 10/IV	2	slow shaft oil seal	50-80-8	65-100-10	70-110-12	80-125-10	100-150-12	105-160-12	120-180-13	130-200-12
3/IV 8/IV	1 1	Slow shaft bearing	32010 32010	32013 32013	32014 32014	32016 32016	32020 32020	32021 32021	32024 32024	32026 32026
	1	Lip seal	40-60-10	50-70-10	60-85-10	70-110-10	80-110-10			

9.7

Mixer with coaxial reduction gear: AVS1÷4 series

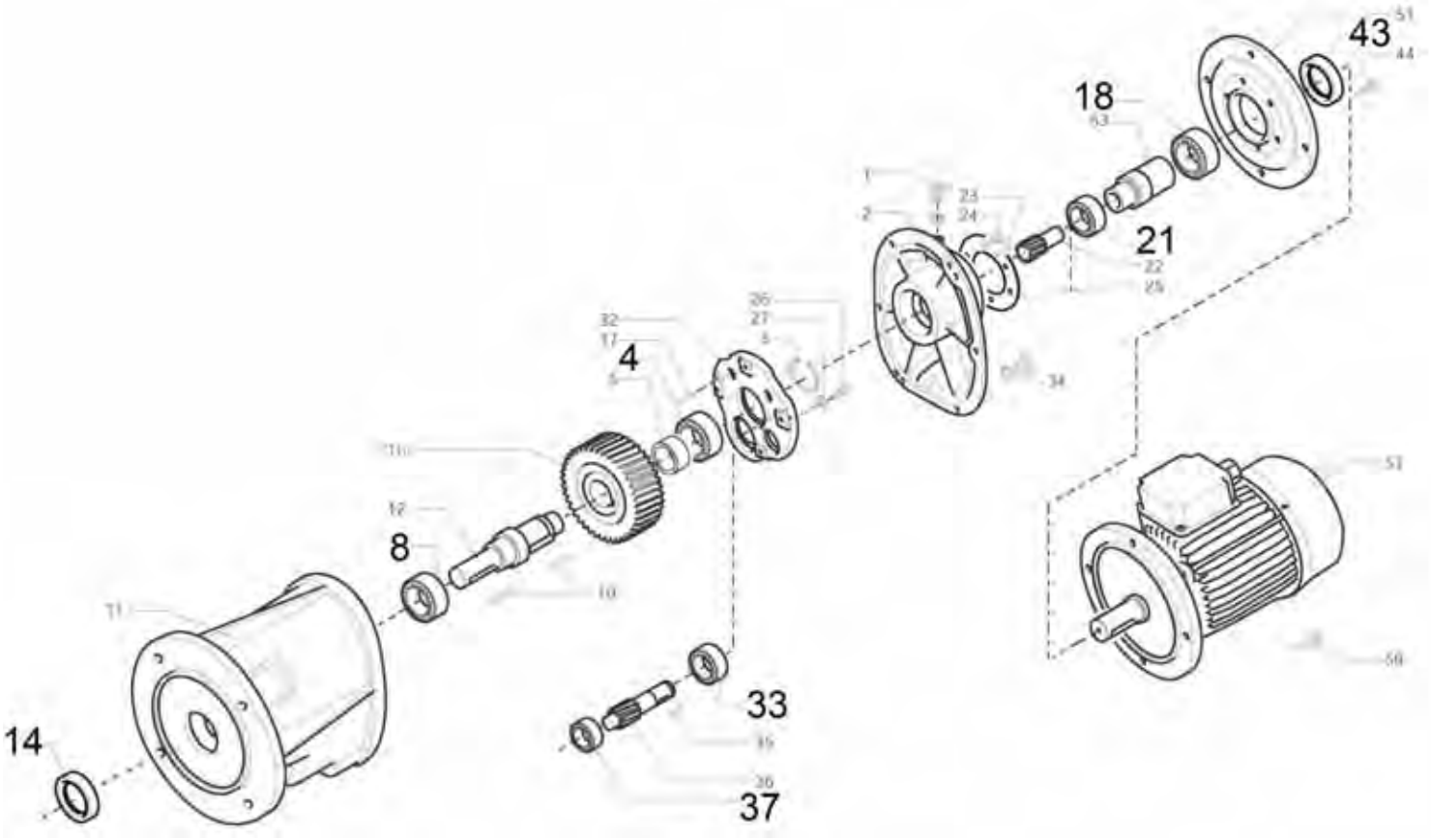

	Reduction gear	Oil seal outlet	Slow shaft bearing	Fast shaft bearing	Motor shaft bearings	Inlet oil seal
Pos		14	8 4	37 33	21 18	43
Q.ty		1	1 1	1 1	1 1	1
AVS1	H061 P90	40-72-10	6306 6206	-	6206	30-52-7
	H061 P100				6207	35-62-7
AVS2	RCV352	40-68-8	32008 32006	30204 30205	6206 6009	45-62-7
AVS3	RCV452	50-72-8	32010 32008	32006 32006	6207 6011	55-80-8
AVS4	RCV552	60-85-8	32012 32011	32006 32006	6207 6011	55-80-8

9.8

Mixer with Planetary reduction gear: AVS5÷11 series

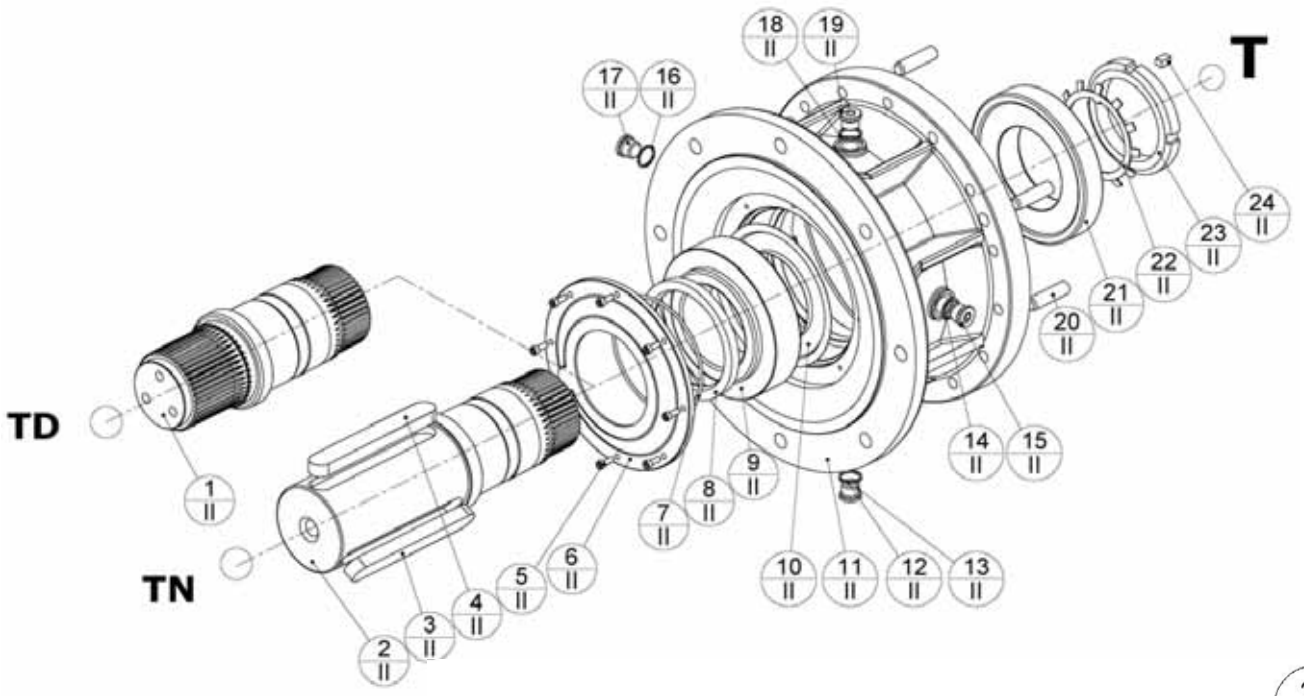

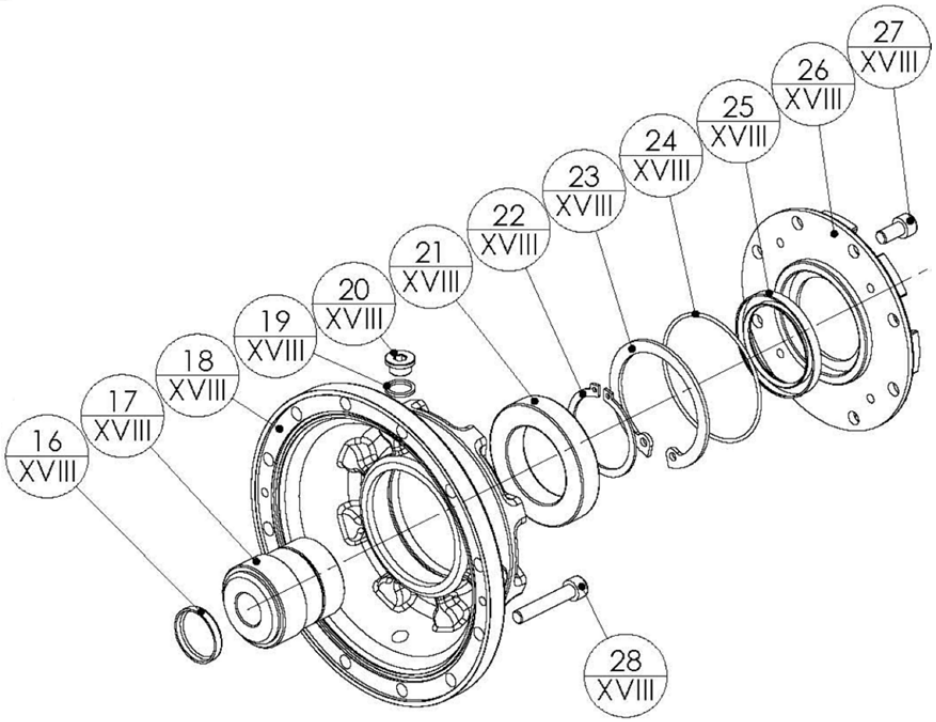

Component subject to wear			Code					
Pos	Q.ty	Description	AVS5	AVS6/7	AVS8	AVS9	AVS10	AVS11
		Reduction gear	EX502	EX802	EX1002	EX1502	EX2502	EX3003
8/II	1	Slow shaft oil seal		105-130-12	105-130-12			
9/II		Slow shaft bearing	30212	32217	32218	32218		
21/II		Slow shaft bearing	32012	32015	32017	30217		
21/XVIII	1	Fast shaft bearing		6012-2RS	6012-2RS			
25/XVIII	1	fast shaft oil seal		60x80x8				

10 - TROUBLESHOOTING TABLE

Problem	Probable cause	Possible solution
1) The mixer will not start	a) No electrical power supply	Provide electrical power supply
	b) Inadequate fuses (low rated current)	Replace fuses with other appropriate ones
	c) Blown fuses due to damaged motor or wires	Repair the motor or replace the cables
	d) Overload protection device previously triggered	Reset the protection device (if it is triggered again, see Problem 2)
	e) Broken gears	Replace gearbox
2) Overload protection device triggered	a) Incorrect calibration value	Adjust the calibration value or replace the protection device
	b) Phase missing	Check the power supply and fuses
	c) Deposits on the rotating parts or impellers immersed in solid sediments	Remove deposits and sediments from the impellers
	d) The density or viscosity of the lubricant is higher than recommended	Change oil
	e) The density or viscosity of the product being mixed is higher than expected	Contact the manufacturer for help
	f) Faulty bearings	Grease or change the bearings
3) The motor or gearbox heat up a lot (surface temperature 70° higher than ambient temperature)	a) Incorrect machine sizing	Check the selection and replace the component
	b) Excessive axial force on the shaft of the mixer	Check the pressure in the tank. It must be less than or equal to that indicated in the technical specification.
	c) Excessive temperature of the product to be mixed	Check the temperature of the product to be mixed. It must be less than or equal to that indicated in the technical specification.
	d) Excessive ambient temperature	Check the ambient temperature. It must be less than or equal to that indicated in the technical specification.
	e) Incorrect level or viscosity of the lubricant	Top up or replace the lubricant
	f) Oil too old	Check the lubricant replacement table
	g) Bearing play too high or defective bearings	Replace bearings
	h) Faulty motor fan or relative grille too dirty or insufficient space for the cooling air to pass through	Check the motor fan, clean the grille and make sure that the cooling air can circulate freely.
	i) The motor is overloaded and the overload protection is faulty or incorrectly adjusted	See Problem 2) and check the overload protection

4) Excessive noise. Anomalous operation. Excessive motor vibrations	a)	The impeller(s) rotate in the air or cavitate due to the low level of liquid	Increase the level of the liquid and keep it as constant as possible
	b)	Unbalanced impeller(s) (blades bent, worn or encrusted)	Check the impeller(s) and replace or clean if necessary
	c)	Bent shaft	Check the linearity of the mixer shaft and contact the manufacturer for help if necessary
	d)	Faulty bearings (the machine whistles)	Grease or replace the bearings
	e)	Faulty motor fan	Replace the motor fan
	f)	Gears are dented (cyclic noise)	No practical problems
	g)	Incorrect coupling of the motor with the machine	Adjust the position of the motor
	h)	Loose fixing screws	Tighten all the fixing screws
5) The motor speed under load decreases (slippage increases)	a)	Rotor or fan seizure	Find and eliminate the faults (rotor, belt pulley, clutch, fan) and carefully balance them.
	b)	Short-circuit in the winding	Find and eliminate the short-circuits, pre-load the motor again
	c)	Fault towards the earth	Find and eliminate the short-circuits, pre-load the motor again
	c)	Connection or winding interruption	Find and eliminate the interruptions
	c)	Single-phase power supply	Check the voltage between the terminals in the terminal box
6) Oil leakage from the gearbox	a)	Oil level not suitable for the construction form	Check and eliminate the excessive oil if necessary
	b)	Overpressure due to missing air bleeding	Add an air bleeding device for the assembly position set
	c)	Faulty seals or seals which are not suitable for the temperature	Replace seals
7) Mixing is insufficient or non-existent	a)	The impeller blades are bent, worn or encrusted	Check and clean or replace the impeller if necessary
	b)	The impeller is not installed in the correct way	Check that the impeller is installed in the correct way
	c)	Incorrect direction of rotation	Reverse the direction of rotation
	d)	Liquid characteristics and tank size are different from those indicated in the technical specification	Contact the manufacturer for help
8) Current asymmetry in power supply cables	a)	Short-circuit in the winding	Find and eliminate the short-circuits, pre-load the motor again
	b)	Fault towards the earth	Find and eliminate the short-circuits, pre-load the motor again
	c)	Connection or winding interruption	Find and eliminate the interruptions
	d)	Single-phase power supply	Check the voltage between the terminals in the terminal box

GREC S.r.l., Via Copernico, 3
20082 Binasco (Mi) – ITALY
Tel. +39 02 3664 5050
Fax +39 02 3664 5054
info@grec.it; www.grec.it

Tax ID. / VAT n. / Reg. Register of Companies of Milan
06972530965
R.E.A. of Milan n. 1926397
Reg. Cap.: 90,000.00€ f.p.

DECLARATION OF INCORPORATION

(In compliance with Directive 2006/42/EC, annex II, par. 1, sub. B)

THE MANUFACTURER

GREC SRL		VIA COPERNICO, 3	
Company		Address	
BINASCO	20082	Milan	ITALY
City	Post code	Province	State

WITH RELEVANT TECHNICAL DOCUMENTATION AUTHORISED BY

Alessandro Ciardullo	Legal Representative	
Name	Role	
VIA COPERNICO, 3	20082	Milan
Address	Post code	Province
BINASCO	ITALY	
City	State	

DECLARES THAT THE PARTLY COMPLETED MACHINERY

AV... series mixer
AL... series mixer
TD.. series turbodisperses

The intended use being: Installation in a container/tank containing liquids to be mixed

It complies with the following applied essential safety requirements:
1.1 - General considerations; 1.3 - Protection measures against mechanical dangers; 1.4 - Required characteristics for protection devices; 1.5 - Risks due to other dangers; 1.6 - maintenance; 1.7 - Information

And it complies with the Community directive:
2006/42/EC (Directive for Machineries)
and with harmonised standards EN ISO 12100:2010 (Machinery safety)

It is also stated that:
- the relevant technical documentation has been drawn up in compliance with annex VII B
- we commit to send via mail or e-mail, following a duly justified claim by the national authorities, the relevant information about this partly completed machinery

IT IS FORBIDDEN
to put it into service until the final machine it has to be incorporated to has been declared complying with directive 2006/42/EC and its regulations, where applicable.

Place and date	The legal Representative
Binasco, 01/04/10	**Alessandro Ciardullo**